Symbulator

Examples from Alexander & Sadiku 7e

Symbulator 9 Samplers

Python / SymPy

Roberto Perez-Franco

Contents

Examples from Alexander & Sadiku 7e **3**

How to read an entry . . . 3

Direct current — DC . . . 4

Transients — TR . . . 23

Sinusoidal steady state — AC . . . 32

The s domain — FD . . . 49

Examples from Alexander & Sadiku 7e

Fifty-two worked examples from *Fundamentals of Electric Circuits*, each described in Symbulator and checked against the answer the book prints.

Here is a selection of problems from *Fundamentals of Electric Circuits*, 7th edition, by Charles K. Alexander and Matthew N. O. Sadiku (McGraw-Hill). The Course's own lessons already draw many of their problems from this book, and none of the fifty-two here repeats one of theirs. These are not the easiest problems in the book, but they are well suited to showing what Symbulator can do, since they are the ones where the distance between *describing a circuit* and *solving it by hand* is widest. The book works each of them by a named method, and here each question is trimmed to what is asked, since Symbulator is told the circuit and never the method.

> ⓘ **NOTE**
>
> **What this chapter is not**
>
> This is not a solutions manual, and it will not teach you circuit analysis. Every example here is worked in full in the book itself, and the book's derivation is the part worth reading. This is a demonstration, aimed at someone who already knows the material and wants to see how the software deals with it.

The problems and diagrams are reproduced for the purpose of teaching students how to use Symbulator, under the principle of fair use. No copyright infringement is intended.

How to read an entry

Each entry gives the book's question, the book's own figure, the Symbulator description, the analysis to choose, and the answers. Every value on the page, in a panel or in a sentence, was compared with the answer the book prints, and they agree. Where the two are written differently, the entry's paragraph says so.

The names are the app's own. `i_r3` is the current through the element called `r3`, `v_2` the voltage at node 2, `p_e` the power consumed by the source called `e`, and `v_r6` the voltage across `r6`. The book names its quantities differently, so each entry says which of the app's answers is which of the book's.

Every circuit is in the app already

Nothing here has to be typed. All fifty-two circuits ship with Symbulator as a built-in example book. Open **Built-in Examples** and pick *Alexander & Sadiku 7ed* from the list of books. The entries are named for the example each one comes from, and each arrives

with its note, its picture, its settings, its Solve card fields and the analysis it wants already set.

Pick one, press **Run Symbulator**, and the answers below are what you get. Working with input files (in the Course) explains what an entry remembers and how to save your own.

Direct current — DC

Twenty-one resistive problems open the chapter. The book's *method*, whether node voltages, mesh currents or a Thévenin equivalent, is a way of getting an answer by hand, not a property of the answer. Symbulator is told the circuit and never told the method, so the same kind of description serves whichever chapter a problem came from. Where the book asks for mesh currents, which belong to no single element, the **By-Hand Equations** card names them. Seven of these problems are answered by the **Find equivalent** card, three are op-amp circuits, and the last five are two-ports from the book's final chapter, each written as an element of its own.

AS7's Example 2.15

Obtain (a) the equivalent resistance R_{ab} for the circuit in the figure and (b) use it to find current i.

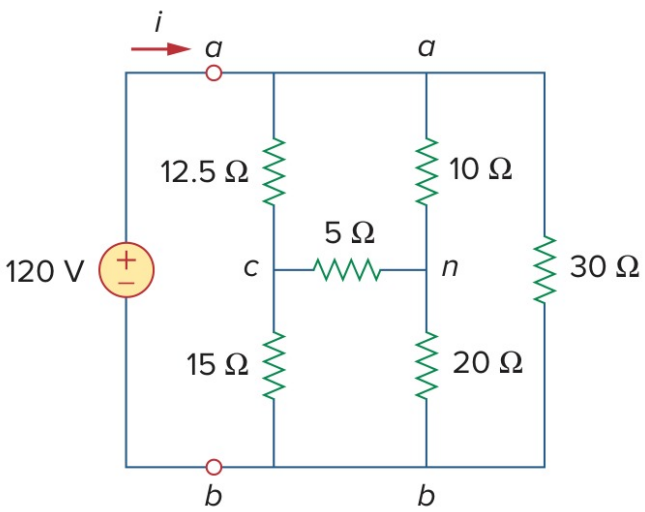

Alexander & Sadiku, 7th edition — the circuit for Example 2.15

SOLUTION

The circuit consists of a 120 V source feeding a network of six resistors between terminals a and b. The network is neither a series nor a parallel combination: its 5 Ω resistor bridges the two middle nodes. The question wants the resistance the source sees, R_{ab}, and the current i it delivers. We describe the network as it is drawn, keeping the figure's letters **a**, **c** and **n** and taking terminal b as ground, node **0**. We name the resistors `r1` to `r6` in the order 12.5 Ω, 15 Ω, 10 Ω, 20 Ω, 5 Ω and 30 Ω.

Circuit Description

```
e,a,0,120
r1,a,c,12.5
r2,c,0,15
r3,a,n,10
r4,n,0,20
r5,c,n,5
r6,a,0,30
```

Set **Analysis** to *DC — direct current*. Set **Rounding** in **Settings** to *approx to n digits* with **n** = 4.

The source's card reports the resistance the source sees, `r_e`, which is R_{ab}. It also reports the source's current into its positive terminal, so the current i the source delivers is the opposite of `ie`.

Symbulator returns **(a)** `r_e` = **9.632** Ω (the book's R_{ab}) and `i_e` = **-12.46** A.

(b) So i = 12.46 A, the opposite of `ie`.

AS7's Example 3.4

Find the node voltages in the circuit of the figure.

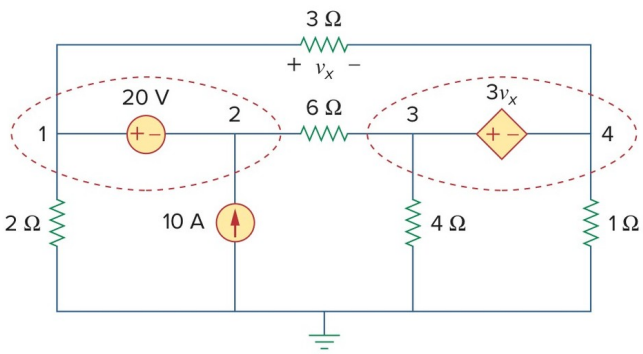

Alexander & Sadiku, 7th edition — the circuit for Example 3.4

SOLUTION

The circuit consists of an independent voltage source, a dependent one, a current source and five resistors, and the question wants the voltage at each of its four nodes. The dependent source is worth three times v_x, the voltage across the 3 Ω resistor. We keep the figure's node numbers, **1** to **4**, with the bottom rail as ground, and name the resistors after their values. So v_x is the voltage drop across `r3`, and the dependent source's value is `3*vr3`. We write each voltage source positive node first, as its polarity marks give, and name the two `e1` and `e2`.

Circuit Description

```
e1,1,2,20
r3,1,4,3
r6,2,3,6
e2,3,4,3*vr3
r2,1,0,2
```

```
j,0,2,10
r4,3,0,4
r1,4,0,1
```

Set **Analysis** to *DC — direct current*. Set **Rounding** in **Settings** to *approx (full precision)*.

Symbulator returns `v_1` = **26.667** V, `v_2` = **6.6667** V, `v_3` = **173.33** V and `v_4` = **-46.667** V.

AS7's Practice Problem 3.4

Find v_1, v_2, and v_3 in the circuit of the figure.

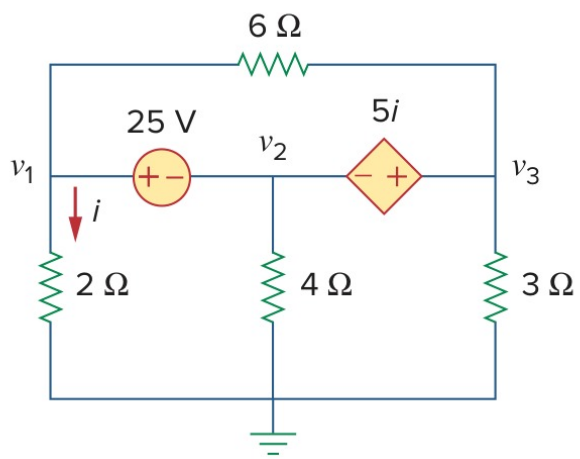

Alexander & Sadiku, 7th edition — the circuit for Practice Problem 3.4

SOLUTION

The circuit consists of an independent voltage source, a dependent one and four resistors, and the question wants the three node voltages. The dependent source is worth five times i, the current down through the 2 Ω resistor. We call the nodes **1**, **2** and **3** after the book's v_1, v_2 and v_3, with the bottom rail as ground, and name the resistors after their values. So i is the current through `r2`, and the dependent source's value is `5*ir2`. Its positive mark is on node 3's side, so we write it `e2,3,2,5*ir2`.

Circuit Description

```
e1,1,2,25
r6,1,3,6
e2,3,2,5*ir2
r2,1,0,2
r4,2,0,4
r3,3,0,3
```

Set **Analysis** to *DC — direct current*. Set **Rounding** in **Settings** to *approx (full precision)*.

Symbulator returns `v_1` = **7.6087** V, `v_2` = **-17.391** V and `v_3` = **1.6304** V.

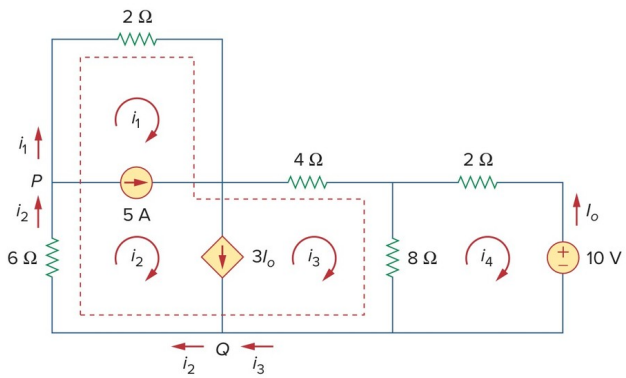

Alexander & Sadiku, 7th edition — the circuit for Example 3.7

AS7's Example 3.7

For the circuit in the figure, find i_1 to i_4.

SOLUTION

The circuit consists of an independent current source, a dependent one, a 10 V source and five resistors, and the question wants its four mesh currents, i_1 to i_4, one for each loop of the figure, all clockwise. The dependent source is worth three times I_o, the current up through the 10 V source. We name the nodes along the middle of the figure **p**, **x**, **y** and **z** from left to right, with the bottom rail as ground. A mesh current is the current of any element that only its own mesh contains, so each one can be read off an element's card, as long as the element is written in the direction of the book's arrow. A current is counted from an element's first node to its second. The 2 Ω resistor at the top is in the first mesh alone, and clockwise runs from **p** to **x**, so we write it `r2a,p,x,2`. The 6 Ω resistor is in the second mesh alone, and clockwise runs up the left side, so we write it `r6,0,p,6`. The 4 Ω resistor is the third mesh's alone, `r4,x,y,4`, and the other 2 Ω resistor the fourth's, `r2b,y,z,2`. The 10 V source is written `e,z,0,10`, so its current is counted downward and I_o is the opposite of `ie`, which makes the dependent source `j2,x,0,-3*ie`.

Circuit Description

```
r6,0,p,6
j1,p,x,5
r2a,p,x,2
j2,x,0,-3*ie
r4,x,y,4
r8,y,0,8
r2b,y,z,2
e,z,0,10
```

Set **Analysis** to *DC — direct current*. Set **Rounding** in **Settings** to *approx to n digits* with **n** = 4.

Symbulator returns `i_r2a` = **-7.5** A (the book's i_1), `i_r6` = **-2.5** A (the book's i_2), `i_r4` = **3.929** A (the book's i_3) and `i_r2b` = **2.143** A (the book's i_4).

AS7's Example 3.11

In the circuit of the figure, determine the currents i_1, i_2, and i_3.

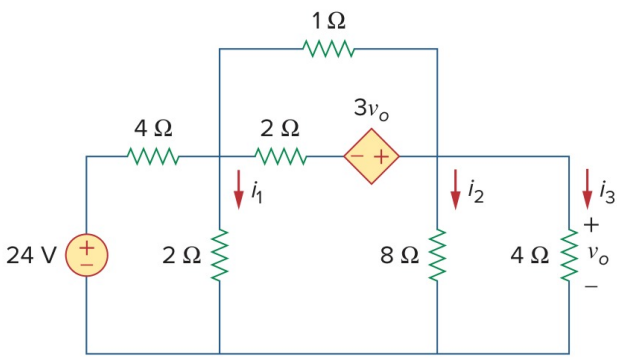

Alexander & Sadiku, 7th edition — the circuit for Example 3.11

SOLUTION

The circuit consists of a 24 V source, a dependent voltage source and six resistors, and the question wants the currents in three of them. The dependent source is worth three times v_o, the voltage across the 4 Ω resistor on the right. We call the node where the 4 Ω beside the source meets the rest **a**, the node the dependent source's positive mark touches **b**, and the node between the dependent source and its 2 Ω resistor **m**, with the bottom rail as ground. We name the two 4 Ω resistors `r4a`, beside the source, and `r4b`, on the right, and the two 2 Ω resistors `r2a`, down to the rail, and `r2b`, in series with the dependent source. The 1 Ω and the 8 Ω we name `r1` and `r8`. The 8 Ω and the right-hand 4 Ω both hang from **b**, so v_o is the voltage drop across `r4b` and the dependent source's value is `3*vr4b`.

Circuit Description

```
e1,1,0,24
r4a,1,a,4
r2a,a,0,2
r2b,a,m,2
e2,b,m,3*vr4b
r1,a,b,1
r8,b,0,8
r4b,b,0,4
```

Set **Analysis** to *DC — direct current*. Set **Rounding** in **Settings** to *approx to n digits* with **n** = 4.

Symbulator returns `i_r2a` = **1.333** A (the book's i_1), `i_r8` = **1.333** A (the book's i_2) and `i_r4b` = **2.667** A (the book's i_3).

AS7's Example 4.7

Find v_x in the figure.

SOLUTION

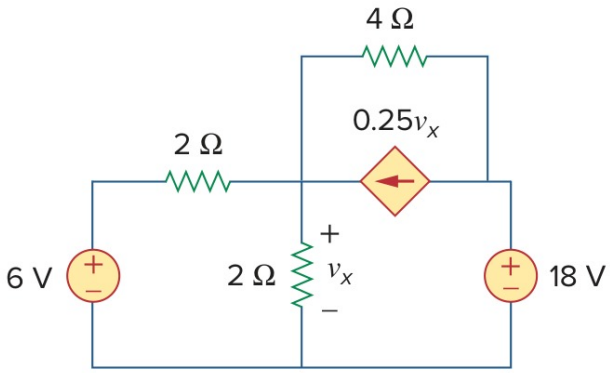

Alexander & Sadiku, 7th edition — the circuit for Example 4.7

The circuit consists of two voltage sources, a dependent current source and three resistors, and the question wants v_x, the voltage across the 2 Ω resistor that runs down to the bottom rail. The dependent source is worth a quarter of v_x and sits across the 4 Ω resistor, its arrow pointing from right to left. We name the 2 Ω resistors `r2a`, beside the 6 V source, and `r2b`, the one v_x is marked across. We call the top of `r2b` **a** and the top of the 18 V source **b**, with the bottom rail as ground. A current source's current flows through it from its first node to its second, so the arrow gives `j,b,a,vr2b/4`.

Circuit Description

```
e1,1,0,6
r2a,1,a,2
r2b,a,0,2
r4,a,b,4
j,b,a,vr2b/4
e2,b,0,18
```

Set **Analysis** to *DC — direct current*. Set **Rounding** in **Settings** to *approx to n digits* with **n** = 4.

Symbulator returns `v_r2b` = **7.5** V (the book's v_x).

AS7's Example 4.9

Find the Thévenin equivalent of the circuit in the figure at terminals a-b.

SOLUTION

The circuit consists of a 5 A source, a dependent voltage source and four resistors, and the question wants its Thévenin equivalent seen from terminals a and b. The dependent source is worth twice v_x, the voltage across the 4 Ω resistor, and it sits across the 2 Ω resistor that joins the two upper nodes. We name that resistor `r2a`, the 2 Ω resistor leading to terminal a `r2b`, and the others after their values. We call the top of the 5 A source **p** and the top of the 6 Ω resistor **q**. The dependent source's positive mark is on **q**'s side, so it is `e,q,p,2*vr4`. Terminal b is on the bottom rail, which we take as ground, so the terminals we name to the **Find equivalent** card are **a** and **0**.

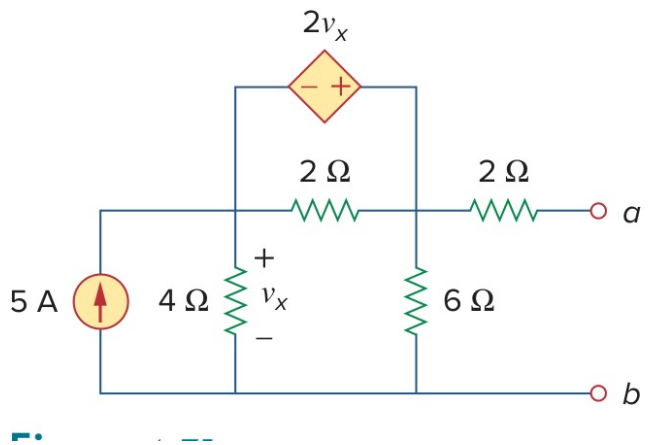

Alexander & Sadiku, 7th edition — the circuit for Example 4.9

Circuit Description

```
j,0,p,5
r4,p,0,4
r2a,p,q,2
e,q,p,2*vr4
r6,q,0,6
r2b,q,a,2
```

Open **Find equivalent**, choose *Thévenin / Norton*, and give the two terminals **a** and **0**.

Symbulator returns `vth` = **20** V and `req` = **6** Ω (the book's R_{Th}).

AS7's Practice Problem 4.9

Find the Thévenin equivalent circuit of the circuit in the figure to the left of the terminals.

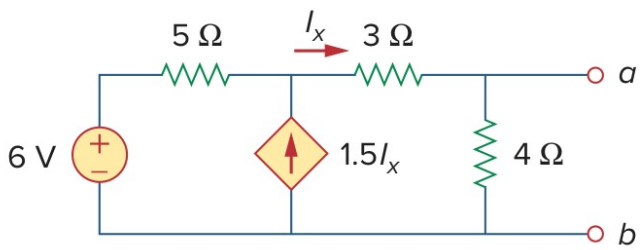

Alexander & Sadiku, 7th edition — the circuit for Practice Problem 4.9

SOLUTION

The circuit consists of a 6 V source, a dependent current source and three resistors, and the question wants its Thévenin equivalent seen from the two terminals on the right. The dependent source is worth 1.5 times I_x, the current to the right through the 3 Ω resistor, and its arrow points up. We call the node its arrow points into **x** and the top terminal **a**, with the bottom rail as ground, and name the resistors after their values. So I_x is the current through `r3`, and the dependent source is `j,0,x,3*ir3/2`.

Circuit Description

```
e,1,0,6
r5,1,x,5
j,0,x,3*ir3/2
r3,x,a,3
r4,a,0,4
```

Open **Find equivalent**, choose *Thévenin / Norton*, and give the two terminals **a** and **0**. Tick **Use SI prefixes in answers** in **Settings**. Set **Rounding** in **Settings** to *approx to n digits* with **n** = 4.

Symbulator returns `vth` = **5.333** V and `req` = **444.4** mΩ (the book's R_{Th}).

AS7's Example 4.10

Determine the Thévenin equivalent of the circuit in the figure at terminals a-b.

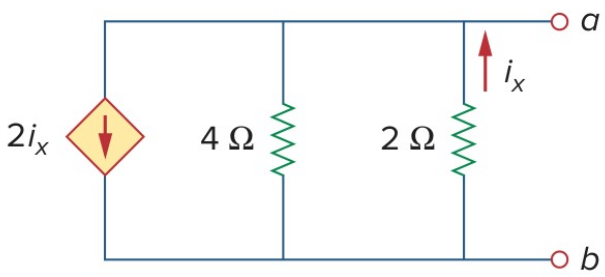

Alexander & Sadiku, 7th edition — the circuit for Example 4.10

SOLUTION

The circuit has no independent source at all: a dependent current source worth twice i_x, the current up through the 2 Ω resistor, in parallel with a 4 Ω and a 2 Ω resistor. The question wants its Thévenin equivalent at terminals a and b. With nothing to drive it, the circuit's open-circuit voltage is zero, so its Thévenin equivalent is a resistance alone, and the **Find equivalent** card's *Resistance / impedance* tool finds it. We take terminal b as ground and call terminal a **a**. We write the 2 Ω resistor from ground up to **a**, `r2,0,a,2`, so that its current is counted upward like i_x, and the dependent source, whose arrow points down, as `j,a,0,2*ir2`.

Circuit Description

```
j,a,0,2*ir2
r4,a,0,4
r2,0,a,2
```

Open **Find equivalent**, choose *Resistance / impedance*, and give the two terminals **a** and **0**.

Symbulator returns `req` = **-4** Ω (the book's R_{Th}).

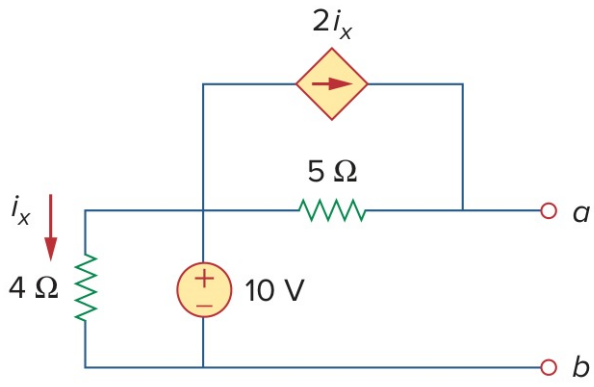

Alexander & Sadiku, 7th edition — the circuit for Example 4.12

AS7's Example 4.12

Find (a) R_N and (b) I_N of the circuit in the figure at terminals a-b.

SOLUTION

The circuit consists of a 10 V source, a dependent current source and two resistors, and the question wants its Norton equivalent at terminals a and b: the current I_N and the resistance R_N. The dependent source is worth twice i_x, the current down through the 4 Ω resistor, and it sits across the 5 Ω resistor with its arrow pointing toward a. We call the top of the 10 V source **p**, take terminal b as ground and name the resistors after their values. So i_x is the current through `r4`, and the dependent source is `j,p,a,2*ir4`. The **Find equivalent** card's *Thévenin / Norton* tool reports both equivalents at once.

Circuit Description

```
r4,p,0,4
e,p,0,10
r5,p,a,5
j,p,a,2*ir4
```

Open **Find equivalent**, choose *Thévenin / Norton*, and give the two terminals **a** and **0**.

Symbulator returns **(a)** `req` = **5** Ω (the book's R_N) and **(b)** `ino` = **7** A (the book's I_N).

AS7's Example 4.13

(a) Find the value of R_L for maximum power transfer in the circuit of the figure. (b) Find the maximum power.

SOLUTION

The circuit consists of a 12 V source, a 2 A source and four resistors feeding a load R_L at terminals a and b, and the question wants the load that draws the most power and how much that power is. By the maximum power theorem that load equals the Thévenin resistance seen from a and b. So we describe the circuit without R_L and ask the **Find equivalent** card for the Thévenin equivalent there, which also reports the most power a load can draw. We number the nodes **1** to **3** from the source, call terminal a **a** and take

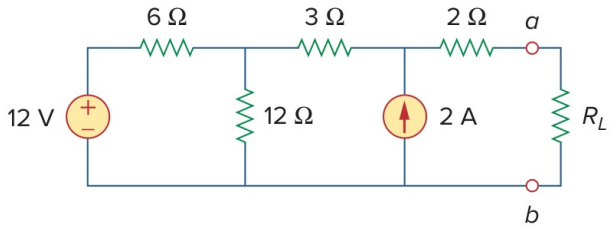

Alexander & Sadiku, 7th edition — the circuit for Example 4.13

terminal b as ground, and we name the resistors after their values.

Circuit Description

```
e,1,0,12
r6,1,2,6
r12,2,0,12
r3,2,3,3
j,0,3,2
r2,3,a,2
```

Open **Find equivalent**, choose *Thévenin / Norton*, and give the two terminals **a** and **0**. Set **Rounding** in **Settings** to *approx to n digits* with **n** = 4.

Symbulator returns **(a)** `req` = **9** Ω (the book's R_L) and **(b)** `pmax` = **13.44** W.

AS7's Example 4.18

The circuit in the figure represents an unbalanced bridge. If the galvanometer has a resistance of 40 Ω, find the current through the galvanometer.

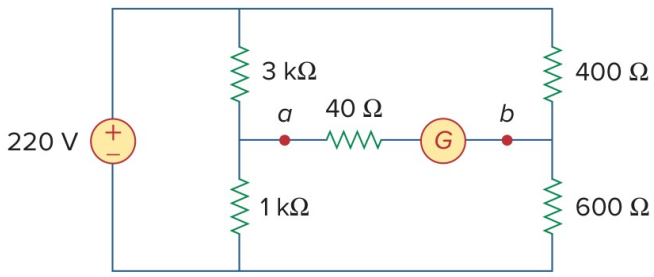

Alexander & Sadiku, 7th edition — the circuit for Example 4.18

SOLUTION

A bridge is a pair of voltage dividers fed by one source, with a meter across the two midpoints. When the two dividers' ratios differ, current flows through the meter. The question wants that current, with the galvanometer taken as a 40 Ω resistance. We keep the figure's letters **a** and **b** for the two midpoints, call the top node **1** and take the bottom rail as ground. We name the galvanometer `rg`, written from **a** to **b**, and the other resistors after their values.

Circuit Description

```
e,1,0,220
r3k,1,a,3'k
```

```
r1k,a,0,1'k
r400,1,b,400
r600,b,0,600
rg,a,b,40
```

Set **Analysis** to *DC — direct current*. Tick **Use SI prefixes in answers** in **Settings**. Set **Rounding** in **Settings** to *approx to n digits* with **n** = 4.

Symbulator returns `i_rg` = **-74.76** mA.

The value is negative, so the current flows through the galvanometer from **b** to **a**.

AS7's Example 5.1

A 741 op amp has an open-loop voltage gain of 2×10^5, input resistance of 2 MΩ, and output resistance of 50 Ω. The op amp is used in the circuit of the figure. (a) Find the closed-loop gain v_o/v_s. (b) Determine current i when v_s = 2 V.

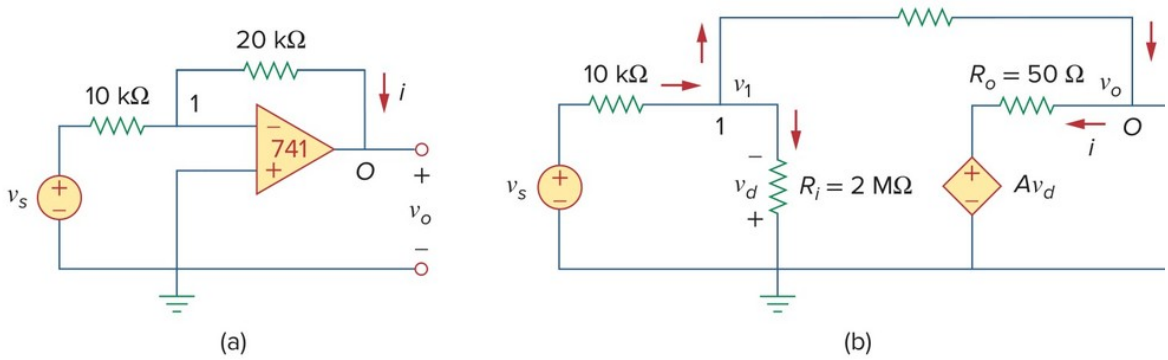

Alexander & Sadiku, 7th edition — the circuit for Example 5.1

SOLUTION

An op amp can be modelled by what is inside it: a resistance between its two inputs, a dependent voltage source worth the open-loop gain times the voltage between them, and a resistance in series with its output. The question wants the closed-loop gain of an inverting amplifier built round that model, and a current at one input voltage. We write the model as three ordinary elements: `ri` for the 2 MΩ input resistance, `ro` for the 50 Ω output resistance, and `e2` for the dependent source. The figure marks v_d positive at the bottom of the input resistance, so we write it from ground to node **1**, `ri,0,1,2'M`, and v_d is its voltage drop `vri`. The dependent source is then `e2,m,0,200000*vri`, with **m** the node between it and `ro`. We leave the source as the symbol `vs`, so that the output comes back as a multiple of it, and call the input node **in** and the output **out**. We name the two outer resistors after their values, `r10k` and `r20k`.

Circuit Description

```
e1,in,0,vs
r10k,in,1,10'k
ri,0,1,2'M
e2,m,0,200000*vri
ro,m,out,50
r20k,1,out,20'k
```

Set **Analysis** to *DC — direct current*. Tick **Use SI prefixes in answers** in **Settings**. Set **Rounding** in **Settings** to *approx (full precision)*.

(a) The closed-loop gain is the output over the source. We type it into **Evaluate**:

```
Evaluate
v_out/vs
```

It gives **-1.9999698** (the book's v_o/v_s).

(b) The current i flows from node **1** to the output through the 20 kΩ feedback resistor. We type its name into **Evaluate** and the source's value into its **Conditions** box:

```
Evaluate
ir20k
```

```
Conditions
vs = 2
```

It gives **199.99799** μA (the book's i).

The book prints the gain as –1.9999699 and the current as 0.19999 mA. Its gain comes from an intermediate equation whose coefficients it rounds to whole numbers, and the circuit itself gives –1.9999698. Its current is cut at five figures, where the circuit gives 0.19999799 mA.

AS7's Example 5.10

If v_1 = 1 V and v_2 = 2 V, find v_o in the op amp circuit of the figure.

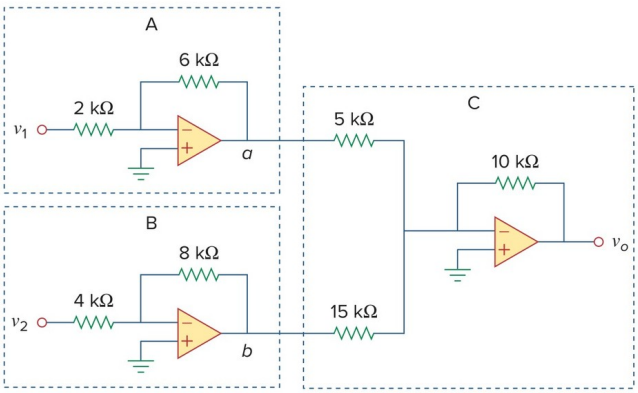

Alexander & Sadiku, 7th edition — the circuit for Example 5.10

SOLUTION

The circuit consists of three op amps: two inverting amplifiers, one for each input, and a summing amplifier that adds their outputs. The question wants the output v_o for the two input voltages given. An ideal op amp is the element `o`, whose three nodes are its non-inverting input, its inverting input and its output, in that order, and all three here have their non-inverting input on ground. We write the inputs as the sources `e1` and `e2`, call the first two outputs **a** and **b** as the figure does and the summer's output **out**, and

name the three inverting inputs n_1, n_2 and n_3. We name the resistors after their values in kΩ, so the 6 kΩ feedback resistor is `r6k`.

Circuit Description

```
e1,s1,0,1
r2k,s1,n1,2'k
o1,0,n1,a
r6k,n1,a,6'k
e2,s2,0,2
r4k,s2,n2,4'k
o2,0,n2,b
r8k,n2,b,8'k
r5k,a,n3,5'k
r15k,b,n3,15'k
o3,0,n3,out
r10k,n3,out,10'k
```

Set **Analysis** to *DC — direct current*. Set **Rounding** in **Settings** to *approx to n digits* with **n** = 4.

Symbulator returns `v_out` = **8.667** V (the book's v_o).

AS7's Practice Problem 5.13

Determine the value of the external gain-setting resistor R_G required for the IA in the figure to produce a gain of 142 when R = 25 kΩ.

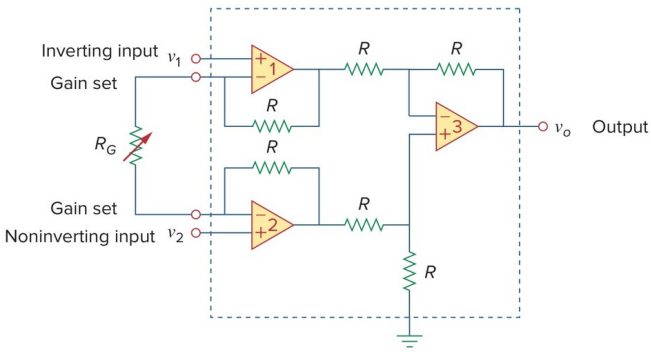

Alexander & Sadiku, 7th edition — the circuit for Practice Problem 5.13

SOLUTION

An instrumentation amplifier is three op amps and seven resistors arranged to amplify the difference between two input voltages, with its gain set by a single external resistor, R_G. The question wants the R_G that makes the gain 142 when every other resistor is 25 kΩ. The gain is the output over the difference of the inputs, so we leave the inputs as the symbols `v1` and `v2` and R_G as the symbol `R_G`, and the run returns the output as a formula in all three. An ideal op amp is the element `o`, with its non-inverting input first: the first takes `v1` there and the second `v2`. We call the gain-set nodes g_1 and g_2, the first two outputs x_1 and x_2, and the third op amp's inputs **p** and **n** and its output **out**.

Circuit Description

```
e1,in1,0,v1
e2,in2,0,v2
o1,in1,g1,x1
r1,x1,g1,25'k
rg,g1,g2,R_G
o2,in2,g2,x2
r2,x2,g2,25'k
r3,x1,n,25'k
r4,n,out,25'k
o3,p,n,out
r5,x2,p,25'k
r6,p,0,25'k
```

Set **Analysis** to *DC — direct current*. Set **Rounding** in **Settings** to *approx to n digits* with **n** = 4.

voltage at node out

$$v_{out} = \frac{R_G\left(-v_1 + v_2\right) - 5.0 \cdot 10^4 v_1 + 5.0 \cdot 10^4 v_2}{R_G}\ \mathrm{V}$$

The gain is 142 when the output is 142 times the difference of the inputs. In the **Solve** card that is one equation and one unknown:

Equation(s) to solve in terms of the results

```
v_out=142*(v2-v1)
```

Unknown(s) to solve for

```
R_G
```

Press **Solve equations**.

The card returns `R_G` = **354.6** Ω.

AS7's Practice Problem 6.10

Determine (a) v_C, (b) i_L, and (c) the energy stored in the capacitor and inductor in the circuit of the figure under dc conditions.

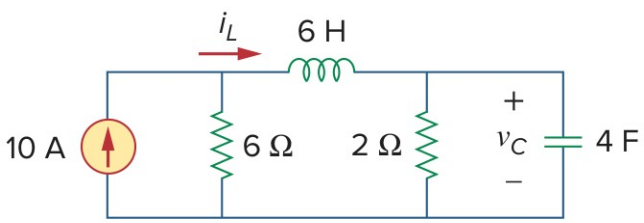

Alexander & Sadiku, 7th edition — the circuit for Practice Problem 6.10

SOLUTION

The circuit consists of a 10 A source feeding a 6 Ω resistor and, through a 6 H inductor, a 2

Ω resistor and a 4 F capacitor. The question wants the capacitor's voltage, the inductor's current and the energy each stores once the circuit has settled. A DC run is that settled state: in it an inductor carries its current with no voltage across it and a capacitor passes no current. We call the two top nodes **1** and **2**, take the bottom rail as ground, and name the resistors after their values. So v_C is the voltage at node 2 and i_L the current through `l`.

Circuit Description

```
j,0,1,10
r6,1,0,6
l,1,2,6
r2,2,0,2
c,2,0,4
```

Set **Analysis** to *DC — direct current*. Set **Rounding** in **Settings** to *approx to n digits* with **n** = 4.

Symbulator returns **(a)** `v_2` = **15** V (the book's v_C) and **(b)** `i_l` = **7.5** A.

(c) A capacitor stores half its capacitance times the square of its voltage. We type that into **Evaluate** with the 4 F capacitance and node 2's voltage:

Evaluate

```
4*v2^2/2
```

It gives **450** J.

An inductor stores half its inductance times the square of its current. With the 6 H inductance:

Evaluate

```
6*il^2/2
```

It gives **168.8** J.

AS7's Example 19.9

The ABCD parameters of the two-port network in the figure are A = 4, B = 20 Ω, C = 0.1 S, D = 2. The output port is connected to a variable load for maximum power transfer. Find (a) R_L and (b) the maximum power transferred.

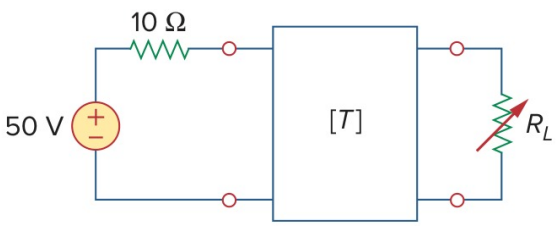

Alexander & Sadiku, 7th edition — the circuit for Example 19.9

SOLUTION

The circuit consists of a 50 V source with a 10 Ω resistor feeding a two-port known only by its transmission parameters, and a variable load on the output port. The question wants the load that draws the most power and that power. A two-port known only by its parameters is an element of its own. For transmission parameters it is `a`, with its two port nodes and the four values as a bracketed term, `[4,20,0.1,2]`. We call the input port's top **p** and the output port's top **q**, with both bottoms on ground. We leave the load out and name its terminals, **q** and **0**, to the **Find equivalent** card with *Thévenin / Norton* chosen. By the maximum power theorem the load that draws the most power is the Thévenin resistance, and the card reports that power too.

Circuit Description

```
e,1,0,50
r10,1,p,10
a,p,q,[4,20,0.1,2]
```

Open **Find equivalent**, choose *Thévenin / Norton*, and give the two terminals **q** and **0**.

Symbulator returns **(a)** `req` = **8** Ω (the book's R_L) and **(b)** `pmax` = **3.125** W (the book's P).

AS7's Practice Problem 19.9

Find I_1 and I_2 if the transmission parameters for the two-port in the figure are A = 5, B = 10 Ω, C = 0.4 S, D = 1.

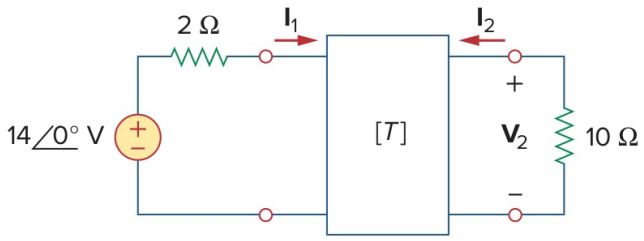

Alexander & Sadiku, 7th edition — the circuit for Practice Problem 19.9

SOLUTION

The circuit consists of a 14 V source with a 2 Ω resistor feeding a two-port known by its transmission parameters, with a 10 Ω load on its output. The question wants the current into each port. The two-port is the element `a`, written with its two port nodes and the bracketed term `[5,10,0.4,1]`. We call the input port's top **p** and the output port's top **q**, with both bottoms on ground. The source is given as a phasor at 0°, which is a plain 14 V, so a DC run answers it. The two-port's card reports the current into each of its ports, counted into the top terminal as the book counts I_1 and I_2.

Circuit Description

```
e,1,0,14
r2,1,p,2
a,p,q,[5,10,0.4,1]
r10,q,0,10
```

Set **Analysis** to *DC — direct current*.

Symbulator returns `i_ap` = **1** A (the book's I_1) and `i_aq` = **-0.2** A (the book's I_2).

AS7's Example 19.12

Evaluate V_2/V_s in the circuit of the figure.

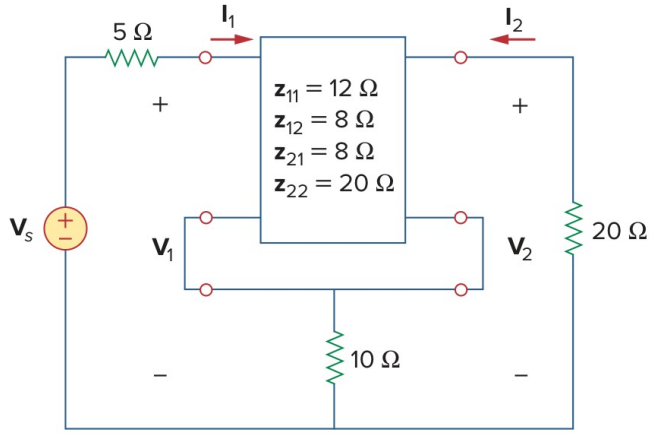

Alexander & Sadiku, 7th edition — the circuit for Example 19.12

SOLUTION

The circuit consists of a two-port given by its z parameters whose two lower terminals are joined and returned to ground through a 10 Ω resistor, fed through 5 Ω and loaded with 20 Ω. The question wants the output voltage over the source's. The 10 Ω resistor is itself a two-port in series with the first, but we need not combine them: we describe the circuit as drawn. A two-port known only by its parameters is an element of its own, `z` for z parameters. Its ports here do not share ground, so we write each port as a bracketed pair of terminals, top node then bottom, `[a,m]` and `[b,m]`, followed by the four values. We call the input port's top **a**, the output port's top **b** and the joined bottoms **m**. We leave the source as the symbol `vs`, so that every answer comes back as a multiple of it. V_2 is marked from **b** down to ground, so it is the voltage at **b**.

Circuit Description

```
e,1,0,vs
r5,1,a,5
z,[a,m],[b,m],[12,8,8,20]
r10,m,0,10
r20,b,0,20
```

Set **Analysis** to *DC — direct current*. Set **Rounding** in **Settings** to *approx to n digits* with **n** = 4.

The ratio asked is the output over the source. We type it into **Evaluate**:

Evaluate

```
v_b/vs
```

It gives **0.3509** (the book's V_2/V_s).

AS7's Example 19.17 gains

Consider the common-emitter amplifier circuit of the figure. Determine (a) the voltage gain, (b) current gain, (c) input impedance, and (d) output impedance using these h parameters: h_{ie} = 1 kΩ, h_{re} = 2.5 × 10^{-4}, h_{fe} = 50, h_{oe} = 20 μS. (e) Find the output voltage V_o.

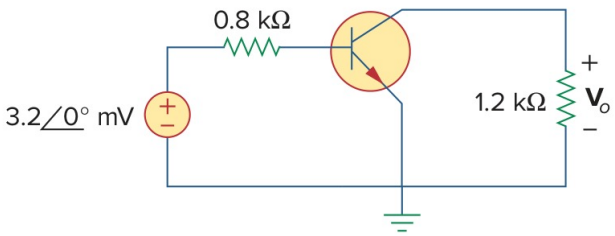

Alexander & Sadiku, 7th edition — the circuit for Example 19.17

SOLUTION

The circuit consists of a transistor in common-emitter connection, modelled by its four h parameters, between a 3.2 mV source with 0.8 kΩ of source resistance and a 1.2 kΩ load. The question wants the gains, the impedances and the output voltage. A transistor known only by its h parameters is a two-port, and a two-port known only by its parameters is an element of its own, `h`, written with its two port nodes and the four values as a bracketed term, `[1000,2.5e-4,50,20'u]`. The emitter is common to both ports, so both ports' bottoms are ground. We call the base **b** and the collector **c**, name the source's resistance `rs` and the load `rl`. The source is given as a phasor at 0°, which is a plain 3.2 mV, so a DC run answers it. V_o is the voltage at **c**, and the two-port's card reports the current into each port, `ihb` and `ihc`.

Circuit Description

```
e,1,0,3.2'm
rs,1,b,800
h,b,c,[1000,2.5e-4,50,20'u]
rl,c,0,1.2'k
```

Set **Analysis** to *DC — direct current*. Tick **Use SI prefixes in answers** in **Settings**. Set **Rounding** in **Settings** to *approx to n digits* with **n** = 4.

(a) The voltage gain the book works out is the transistor's: its output voltage over its input voltage, the voltage at **c** over the voltage at **b**. We type that into **Evaluate**:

Evaluate

```
v_c/v_b
```

It gives **-59.46** (the book's A_v).

(b) The current gain is the current into the output port over the current into the input port:

```
Evaluate
i_hc/i_hb
```

It gives **48.83** (the book's A_i).

(c) The input impedance is the input port's voltage over its current:

```
Evaluate
v_b/i_hb
```

It gives **985.4** Ω (the book's Z_{in}).

(d) The output impedance is the resistance seen into the output port with the load removed, so it is a run of its own, the next entry.

(e) The output voltage V_o is the voltage at **c**, read off the run: `v_c` = **-105** mV (the book's V_o).

The book prints V_o as −105.09 mV, carried through its own rounded arithmetic. The gain of the whole circuit, V_o over the 3.2 mV source, is −32.82, and −32.82 times 3.2 mV is −105.02 mV, which is what the run gives.

AS7's Example 19.17 output impedance

(d) Determine the output impedance of the amplifier.

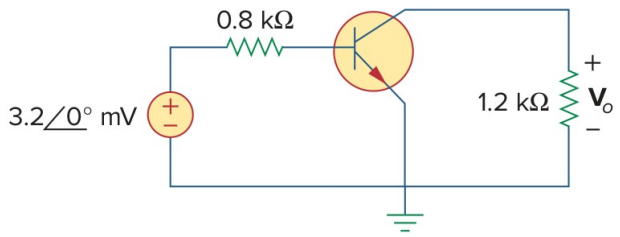

Alexander & Sadiku, 7th edition — the circuit for Example 19.17

SOLUTION

This is the same amplifier with the load removed, and part (d) of the question wants the impedance seen looking back into the collector. That is the Thévenin resistance at the output, so we describe the circuit without `rl` and name **c** and **0** to the **Find equivalent** card with *Thévenin / Norton* chosen.

```
Circuit Description
e,1,0,3.2'm
rs,1,b,800
h,b,c,[1000,2.5e-4,50,20'u]
```

Open **Find equivalent**, choose *Thévenin / Norton*, and give the two terminals **c** and **0**. Tick **Use SI prefixes in answers** in **Settings**. Set **Rounding** in **Settings** to *approx to n digits* with **n** = 4.

Symbulator returns **(d)** `req` = **76.6** kΩ (the book's Z_{out}).

Transients — TR

Eight transient problems follow. The pattern is the one you would follow by hand: run the circuit as it was before the switch moved in DC, read off the capacitor voltages and inductor currents, put those numbers in the fifth field of the `c` and `l` lines, and run the circuit as it is afterwards in TR. No time constant is computed and no solution form is selected. A switch that closes is a short circuit, the element `s`, and sequential switching is simply one more run. Three of the eight are op-amp circuits, one of them of second order.

AS7's Example 7.5

In the circuit shown in the figure, find i_o, v_o, and i for all time, assuming that the switch was open for a long time.

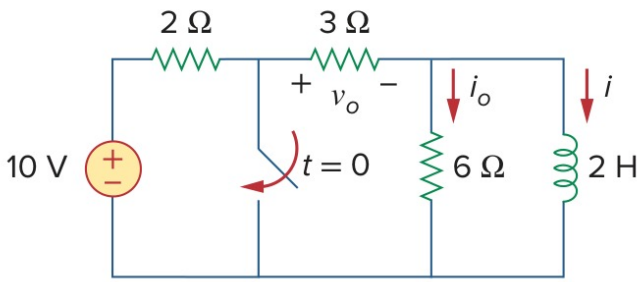

Alexander & Sadiku, 7th edition — the circuit for Example 7.5

SOLUTION

The circuit consists of a 10 V source feeding a 3 Ω resistor and an inductor in parallel with a 6 Ω resistor, and a switch that shorts the node between the 2 Ω and the 3 Ω to ground at $t = 0$. The question wants the inductor's current, the current in the 6 Ω and the voltage across the 3 Ω for all time, so before the switch closes as well as after. There are two intervals, and two runs. Before $t = 0$ the switch has been open for a long time and the circuit is steady. We describe it as it stands then, calling the source's top **1**, the node between the 2 Ω and the 3 Ω **a** and the top of the inductor **b**. We name the resistors after their values and the inductor `l`, and run it in DC:

Circuit Description

```
e,1,0,10
r2,1,a,2
r3,a,b,3
r6,b,0,6
l,b,0,2
```

Set **Analysis** to *DC — direct current*.

Symbulator returns `i_l` = **2** A (the book's i), `v_r3` = **6** V (the book's v_o) and `i_r6` = **0** A (the book's i_o).

Closing the switch joins **a** to ground. A closed switch is a short circuit, the element `s`, so we describe the second circuit as the first with `s,a,0` added, and give the inductor the 2 A just found as its fifth field. We set the analysis to TR. The source stays in the description:

the short takes its current, and nothing from it reaches the 3 Ω. i is the current through `l` and i_o the current through `r6`.

Circuit Description

```
e,1,0,10
r2,1,a,2
r3,a,b,3
s,a,0
r6,b,0,6
l,b,0,2,2
```

Set **Analysis** to *TR — transient / time domain*. Set **Rounding** in **Settings** to *approx to n digits* with **n** = 4.

current through l

$$i_l = 2.0e^{-t}\,\mathrm{A}$$

current through r6

$$i_{r6} = -0.6667e^{-t}\,\mathrm{A}$$

voltage at node b

$$v_b = -4.0e^{-t}\,\mathrm{V}$$

Here `i_l` is the book's i and `i_r6` is the book's i_o.

The run holds before t = 0 the values the first run gave: i = 2 A, i_o = 0 and v_o = 6 V. After it, v_o is the voltage from **a** to **b**. The switch holds **a** at zero, so v_o is the opposite of `v_b`, $4e^{-t}$ V.

AS7's Example 7.13 to 4 s

At t = 0, switch 1 in the figure is closed, and switch 2 is closed 4 s later. (a) Find $i(t)$ for t > 0. (b) Calculate i for t = 2 s and t = 5 s.

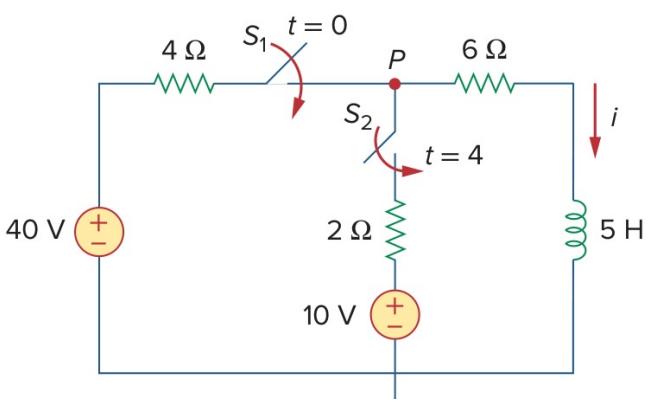

Alexander & Sadiku, 7th edition — the circuit for Example 7.13

SOLUTION

The circuit consists of an inductor, a 40 V source that switch 1 connects at $t = 0$, and a 10 V source that switch 2 connects 4 s later. The question wants the inductor's current for all $t > 0$ and its value at two instants. Before $t = 0$ both switches are open and no source reaches the inductor, so it carries no current and needs no first run. There are two intervals after that, and two runs. In the first, only switch 1 is closed, which puts the 40 V source, the 4 Ω, the 6 Ω and the inductor in one loop. In TR a source with a plain numerical value is a step that begins at $t = 0$, so switch 1 needs no element. We call the source's top **1**, the node **P** of the figure **p** and the top of the inductor **x**. We write the inductor without a fifth field and set the analysis to TR. i is the current through `l`.

Circuit Description

```
e1,1,0,40
r4,1,p,4
r6,p,x,6
l,x,0,5
```

Set **Analysis** to *TR — transient / time domain*. Set **Rounding** in **Settings** to *approx to n digits* with **n** = 4.

current through l

$$i_l = 4.0 - 4.0e^{-2t}\ \mathrm{A}$$

(a) is `i_l` (the book's i).

(b) The question asks for i at $t = 2$ s, which falls in this interval. We read it from the answer with **Evaluate**:

Evaluate

```
i_l
```

Conditions

```
t = 2
```

It gives **3.927** A (the book's $i(2)$).

Switch 2 closes at $t = 4$ s, and the current at that instant is where the next interval starts. We read it the same way:

Evaluate

```
i_l
```

Conditions

```
t = 4
```

It gives **3.999** A (the book's $i(4)$).

AS7's Example 7.13 after 4 s

(a) Find $i(t)$ for $t \geq 4$ s, and (b) calculate i for $t = 5$ s. (Time is measured from the closing of switch 2.)

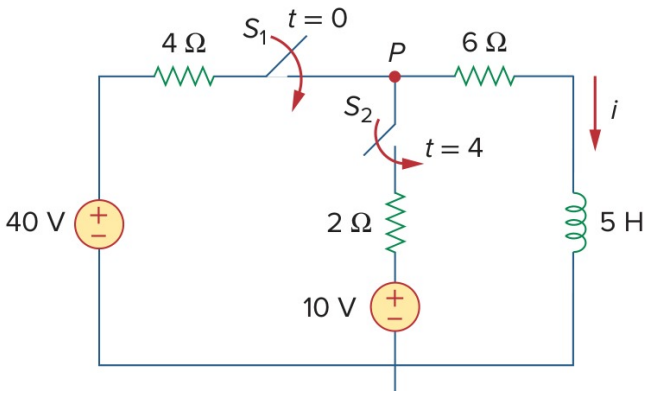

Alexander & Sadiku, 7th edition — the circuit for Example 7.13

SOLUTION

This is the second interval of the same problem. Switch 2 has closed too, adding the 2 Ω and the 10 V source between node **p** and ground. We call the node between them **q**, and name the two sources `e1` and `e2`. The inductor's current cannot jump, so it starts this interval at the value the first run reached at 4 s, $4 - 4e^{-8}$. We write that as the expression `4-4*exp(-8)` in its fifth field, which keeps it exact. This run's $t = 0$ is the instant switch 2 closes, so the book's t is this run's t plus 4 s.

Circuit Description

```
e1,1,0,40
r4,1,p,4
r2,p,q,2
e2,q,0,10
r6,p,x,6
l,x,0,5,4-4*exp(-8)
```

Set **Analysis** to *TR — transient / time domain*. Set **Rounding** in **Settings** to *approx to n digits* with **n** = 4.

current through l

$$i_l = -4.0e^{-\frac{22t}{15}-8} + 2.727 + 1.273e^{-\frac{22t}{15}} \text{ A}$$

(a) is `i_l` (the book's i).

(b) The question asks for i at $t = 5$ s, which is 1 s after switch 2 closes. We read it from the answer with **Evaluate**:

Evaluate

```
i_l
```

Conditions

```
t = 1
```

It gives **3.021** A (the book's $i(5)$).

AS7's Example 7.14

For the op amp circuit in the figure, find v_o for $t > 0$, given that $v(0) = 3$ V. Let $R_f = 80$ kΩ, $R_1 = 20$ kΩ, and $C = 5$ μF.

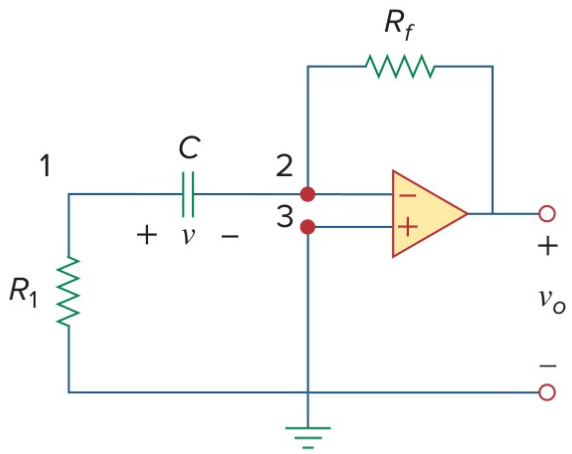

(a)

Alexander & Sadiku, 7th edition — the circuit for Example 7.14

SOLUTION

The circuit consists of an op amp whose input capacitor holds 3 V, with a resistor from the capacitor to ground and a feedback resistor. There is no source, so the question wants the output as the capacitor discharges. An ideal op amp is the element `o`, whose three nodes are its non-inverting input, its inverting input and its output. Its non-inverting input is on ground. We keep the figure's node numbers **1** and **2**, call the output **out**, and name the resistors `r1` and `rf` after the book's R_1 and R_f. The capacitor's voltage v is positive on node 1's side, so we write it `c,1,2,5'u,3`, with the 3 V as its fifth field. We set the analysis to TR.

Circuit Description

```
r1,1,0,20'k
c,1,2,5'u,3
o,0,2,out
rf,2,out,80'k
```

Set **Analysis** to *TR — transient / time domain*.

voltage at node out

$$v_{out} = 12e^{-10t}\ \text{V}$$

`v_out` is the book's v_o.

AS7's Example 7.16

Find the step response $v_o(t)$ for $t > 0$ in the op amp circuit of the figure. Let $v_i = 2u(t)$ V, $R_1 = 20$ kΩ, $R_f = 50$ kΩ, $R_2 = R_3 = 10$ kΩ, $C = 2$ μF.

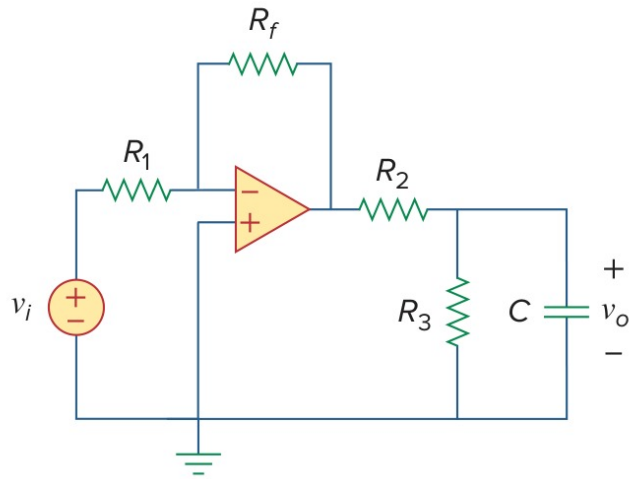

Alexander & Sadiku, 7th edition — the circuit for Example 7.16

SOLUTION

The circuit consists of an inverting amplifier whose output feeds a 10 kΩ resistor into a second 10 kΩ and a capacitor in parallel. The question wants the capacitor's voltage after a 2 V step at the input. In TR a source with a plain numerical value is a step that begins at $t = 0$, so $2u(t)$ is the source `e,1,0,2`. An ideal op amp is the element `o`, with its non-inverting input first, here on ground. We call its inverting input **n**, its output **a** and the top of the capacitor **p**, and name the resistors after the book's R_1, R_f, R_2 and R_3. The capacitor holds no charge at the step, so it has no fifth field. We set the analysis to TR. v_o is the voltage at node **p**.

Circuit Description

```
e,1,0,2
r1,1,n,20'k
o,0,n,a
rf,n,a,50'k
r2,a,p,10'k
r3,p,0,10'k
c,p,0,2'u
```

Set **Analysis** to *TR — transient / time domain*. Set **Rounding** in **Settings** to *approx to n digits* with **n** = 4.

voltage at node p

$$v_p = -2.5 + 2.5e^{-100t}\ \text{V}$$

v_p is the book's v_o.

AS7's Practice Problem 8.6

Refer to the circuit in the figure. Find $v(t)$ for $t > 0$.

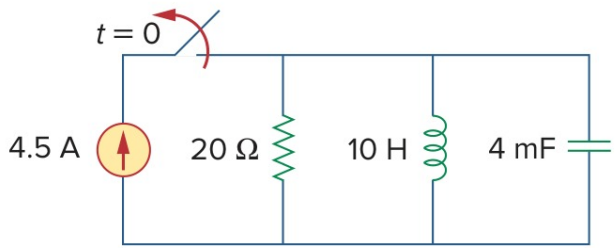

Alexander & Sadiku, 7th edition — the circuit for Practice Problem 8.6

SOLUTION

The circuit consists of a 4.5 A source, which a switch cuts off at $t = 0$, in parallel with a 20 Ω resistor, a 10 H inductor and a 4 mF capacitor. The question wants the voltage across the three afterwards. There are two intervals, and two runs. Before $t = 0$ the source has fed the three for a long time and the circuit is steady. We describe it as it stands then, all four elements between node **1** and ground, and run it in DC for the inductor's current and the capacitor's voltage:

Circuit Description

```
j,0,1,4.5
r20,1,0,20
l,1,0,10
c,1,0,4'm
```

Set **Analysis** to *DC — direct current*.

Symbulator returns `i_l` = **4.5** A (the book's $i_L(0)$) and `v_1` = **0** V (the book's $v(0)$).

Opening the switch removes the source and leaves the resistor, the inductor and the capacitor to release what they hold. We describe those three with the same names and give the inductor and the capacitor the 4.5 A and 0 V just found as their fifth fields. We set the analysis to TR. v is the voltage at node 1.

Circuit Description

```
r20,1,0,20
l,1,0,10,4.5
c,1,0,4'm,0
```

Set **Analysis** to *TR — transient / time domain*.

voltage at node 1

$$v_1 = 150.0e^{-10.0t} - 150.0e^{-2.5t}\ \text{V}$$

`v_1` is the book's v.

AS7's Practice Problem 8.10

For $t > 0$, obtain $v_o(t)$ in the circuit of the figure.

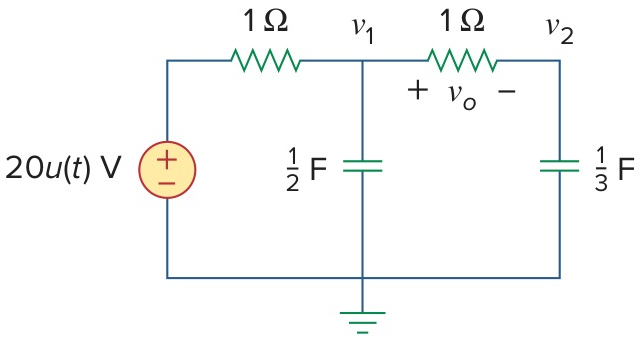

Alexander & Sadiku, 7th edition — the circuit for Practice Problem 8.10

SOLUTION

The circuit is a ladder of two resistors and two capacitors switched onto a 20 V step, and the question wants the voltage across the second resistor. In TR a source with a plain numerical value is a step that begins at $t = 0$, so $20u(t)$ is the source `e,s,0,20`. We call the source's top **s** and keep the figure's v_1 and v_2 as nodes **1** and **2**. We name the resistors `ra` and `rb` and the capacitors `c1` and `c2`, writing the capacitances as the fractions the book gives, `1/2` and `1/3`. Neither capacitor holds a charge. We set the analysis to TR.

Circuit Description

```
e,s,0,20
ra,s,1,1
c1,1,0,1/2
rb,1,2,1
c2,2,0,1/3
```

Set **Analysis** to *TR — transient / time domain*.

The voltage v_o is marked across the second 1 Ω resistor, positive on node 1's side, so it is the difference of the two node voltages. We type it into **Evaluate**:

Evaluate

```
v_1 - v_2
```

It gives:

the voltage across rb

$$v_o = 8e^{-t} - 8e^{-6t}\ \text{V}$$

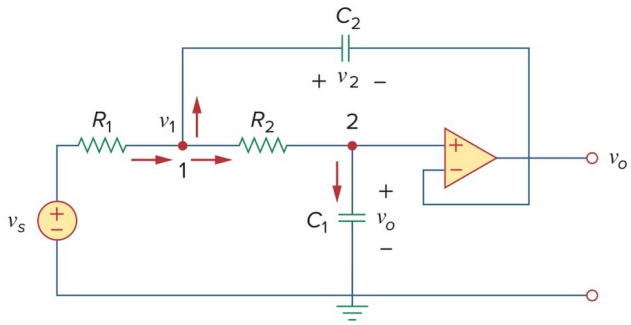

Alexander & Sadiku, 7th edition — the circuit for Example 8.11

AS7's Example 8.11

In the op amp circuit of the figure, find $v_o(t)$ for $t > 0$ when $v_s = 10u(t)$ mV. Let $R_1 = R_2 =$ 10 kΩ, $C_1 = 20\ \mu$F, and $C_2 = 100\ \mu$F.

SOLUTION

The circuit consists of an op amp wired as a voltage follower, fed through two resistors, with one capacitor from the junction of the resistors to the output and another from the follower's input to ground. The question wants the output after a 10 mV step. In TR a source with a plain numerical value is a step that begins at $t = 0$, so we write it `e,in,0,10'm`. An ideal op amp is the element `o`, with its non-inverting input first: here that input is node **2** and the inverting input is the output itself, so it is `o,2,out,out`. We keep the figure's node numbers **1** and **2**, call the output **out**, and name the elements after the book's R_1, R_2, C_1 and C_2. Neither capacitor holds a charge. We set the analysis to TR.

Circuit Description

```
e,in,0,10'm
r1,in,1,10'k
r2,1,2,10'k
c1,2,0,20'u
c2,1,out,100'u
o,2,out,out
```

Set **Analysis** to *TR — transient / time domain*. Set **Rounding** in **Settings** to *approx to n digits* with **n** = 4.

voltage at node out

$$v_{out} = 0.005\left(2.0e^{t} - \sin(2t) - 2.0\cos(2t)\right)e^{-t}\ \text{V}$$

`v_out` is the book's v_o.

The run gives the output in volts. In millivolts it reads $10 - e^{-t}(10\cos 2t + 5\sin 2t)$.

Sinusoidal steady state — AC

Seventeen problems are in the sinusoidal steady state. Where the book gives its impedances in ohms they go in as written, complex ones included, and the frequency never enters: **omega** is left as a symbol in the ω **— angular frequency** box and nothing depends on it. Where the book gives henries and farads instead, the frequency goes in that box and the conversion to impedance is the solver's. Two filter problems leave the frequency as a symbol on purpose, and find their corner frequency in the **Solve** card. Two circuits run at more than one frequency at once, and take one run per frequency, which is superposition done the way the book does it. The powers of an AC run are on every card, and a power factor is one entry in the **Mini-Tools** card.

AS7's Example 9.14

For the RL circuit shown in the figure, calculate the amount of phase shift produced at 2 kHz.

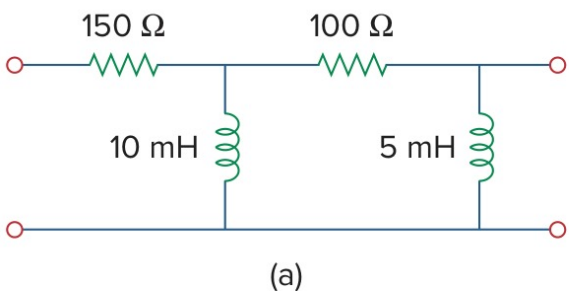

Alexander & Sadiku, 7th edition — the circuit for Example 9.14

SOLUTION

The circuit is a ladder of two resistors and two inductors between an input and an output, and the question wants the phase of the output relative to the input at 2 kHz. We leave the input as the symbol `vi`, so that every answer comes back as a multiple of it. The inductors are given as inductances, so we write them as they are, `110` and `15`, and put the angular frequency in the ω **— angular frequency** box. That is 2π times 2000 Hz, which we type as `4000*pi`. We call the input node **in**, the node between the two rungs **1** and the output **out**, and name the resistors after their values.

Circuit Description

```
e,in,0,vi
r150,in,1,150
l10,1,0,10'm
r100,1,out,100
l5,out,0,5'm
```

Set **Analysis** to *AC — alternating current*. Put **12566.4** in the ω **— angular frequency** box. Set **Rounding** in **Settings** to *approx to n digits* with **n** = 4.

The phase shift is the angle of the output over the input. We type that ratio into **Evaluate**:

```
Evaluate
v_out/vi
```

It gives **-0.03264 + 0.1877j** (**0.1905∠99.87°**, the book's V_o/V_i).

The ratio's angle is the phase shift: the output leads the input by about 100°, at about 19% of its amplitude.

AS7's Example 10.2

Compute V_1 and V_2 in the circuit of the figure.

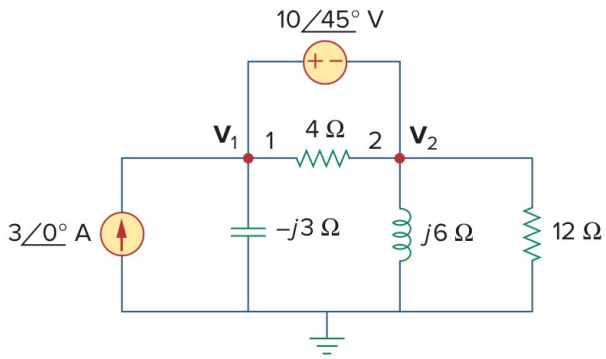

Alexander & Sadiku, 7th edition — the circuit for Example 10.2

SOLUTION

The circuit consists of a current source, a voltage source between two nodes, and four impedances given in ohms. The question wants the phasor voltages at the two top nodes, V_1 and V_2. Every impedance is given in ohms, so we write each one as a resistor with its value, `-3j` for the capacitor and `6j` for the inductor, and leave the frequency as the symbol `omega`, which no value uses. We keep the figure's node numbers **1** and **2**. A source's value is a phasor, its magnitude and its angle in degrees, so the voltage source is `(10∠45°)`, positive on node 1's side, and the current source is `j,0,1,3`, its arrow pointing up into node 1.

```
Circuit Description
j,0,1,3
rc,1,0,-3j
e,1,2,(10∠45°)
r4,1,2,4
rl,2,0,6j
r12,2,0,12
```

Set **Analysis** to *AC — alternating current*. Leave **omega** in the **ω — angular frequency** box, since nothing here depends on the frequency. Set **Rounding** in **Settings** to *approx to n digits* with **n** = 4.

Symbulator returns `v_1` = **8.614 - 24.3j** V (**25.78∠-70.48°**) and `v_2` = **1.543 - 31.37j** V (**31.41∠-87.18°**).

AS7's Example 10.4

Solve for V_o in the circuit of the figure.

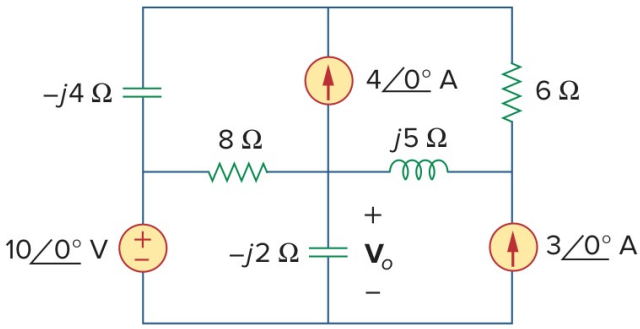

Alexander & Sadiku, 7th edition — the circuit for Example 10.4

SOLUTION

The circuit consists of a voltage source, two current sources and five impedances in four meshes, and the question wants the voltage V_o across the $-j_2$ Ω capacitor. The whole top edge of the figure is one wire, which we call node **t**. We call the top of the 10 V source **l**, the centre of the figure **c** and the right-hand node below the 6 Ω **r**, with the bottom rail as ground. Every impedance is given in ohms, so each is a resistor with its value: `rc4` and `rc2` for the two capacitors, `rl` for the inductor, `r8` and `r6` for the resistors. The 4 A source's arrow points up from **c** to **t**, and the 3 A source's up from ground to **r**. V_o is the voltage at node **c**.

Circuit Description

```
e,l,0,10
rc4,t,l,-4j
r8,l,c,8
j1,c,t,4
rl,c,r,5j
r6,t,r,6
j2,0,r,3
rc2,c,0,-2j
```

Set **Analysis** to *AC — alternating current*. Leave **omega** in the ω **— angular frequency** box, since nothing here depends on the frequency. Set **Rounding** in **Settings** to *approx to n digits* with **n** = 4.

Symbulator returns `v_c` = **-7.214 - 6.566j** V (**9.754∠-137.7°**, the book's V_o).

AS7's Example 10.6

Find v_o of the circuit of the figure.

SOLUTION

The circuit consists of three sources at three different frequencies, a 10 cos $2t$ V source, a 2 sin $5t$ A source and a 5 V dc source, feeding an inductor, a capacitor and two resistors. The question wants the voltage v_o across the 1 Ω resistor. A DC or an AC run works at one

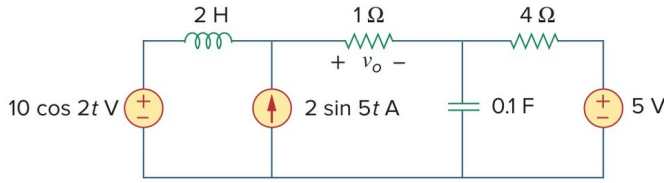

Alexander & Sadiku, 7th edition — the circuit for Example 10.6

frequency, and this circuit has three, so the answer takes one run per source. In each run the other two sources are switched off, which is what superposition does: a voltage source at zero is a short, and a current source at zero is an open. We call the top of the 10 V source **a**, the top of the current source **b**, the top of the capacitor **c** and the top of the 5 V source **d**, with the bottom rail as ground. We name the sources `e1`, `j` and `e2` and the resistors after their values, so v_o is the voltage drop across `r1`. The first run keeps the 5 V source alone. DC sees the inductor as a short and the capacitor as an open, and the other two sources get the value 0:

Circuit Description

```
e1,a,0,0
l,a,b,2
j,0,b,0
r1,b,c,1
c,c,0,0.1
r4,c,d,4
e2,d,0,5
```

Set **Analysis** to *DC — direct current*.

Symbulator returns `v_r1` = **-1** V (the book's v_1).

The second run keeps the 10 cos 2t V source alone, at its frequency of 2 rad/s. In AC a source's value is its phasor, and a cosine of amplitude 10 with no phase is `10`. The inductor and the capacitor are given in henries and farads, so the frequency goes in the **ω — angular frequency** box. The current source and the 5 V source get the value 0:

Circuit Description

```
e1,a,0,10
l,a,b,2
j,0,b,0
r1,b,c,1
c,c,0,0.1
r4,c,d,4
e2,d,0,0
```

Set **Analysis** to *AC — alternating current*. Put **2** in the **ω — angular frequency** box. Set **Rounding** in **Settings** to *approx to n digits* with **n** = 4.

Symbulator returns `v_r1` = **2.146 - 1.279j** V (**2.498∠-30.78°**, the book's V_2).

The third run keeps the 2 sin 5t A source alone, at 5 rad/s. Phasors are measured against a cosine, and 2 sin 5t is 2 cos(5t − 90°), so the source's value is the phasor `(2∠-90°)`. The two voltage sources get the value 0, and the frequency is 5:

Circuit Description

```
e1,a,0,0
l,a,b,2
j,0,b,(2∠-90°)
r1,b,c,1
c,c,0,0.1
r4,c,d,4
e2,d,0,0
```

Set **Analysis** to *AC — alternating current*. Put **5** in the ω **— angular frequency** box. Set **Rounding** in **Settings** to *approx to n digits* with **n** = 4.

Symbulator returns `v_r1` = **0.4878 - 2.276j** V (**2.328∠-77.91°**, the book's V_3).

Each run's phasor is one term of v_o, at its own frequency. Written back in time and added, $v_o = -1 + 2.498\cos(2t - 30.78°) + 2.328\cos(5t - 77.91°)$ V. The book prints $v_o = -1 + 2.498\cos(2t - 30.79°) + 2.33\sin(5t + 10°)$ V. We believe ours is correct.

AS7's Practice Problem 10.6

Calculate v_o in the circuit of the figure.

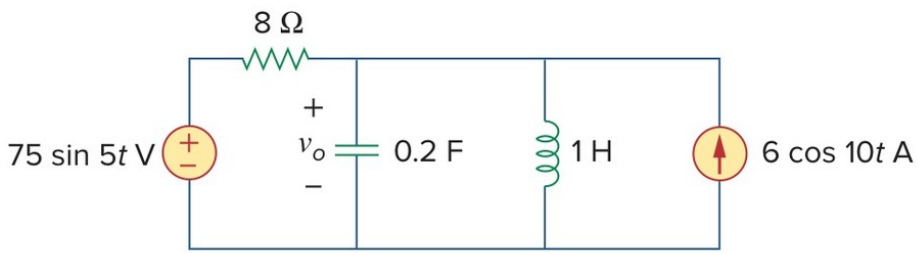

Alexander & Sadiku, 7th edition — the circuit for Practice Problem 10.6

SOLUTION

The circuit consists of a 75 sin 5t V source and a 6 cos 10t A source, at two different frequencies, feeding an 8 Ω resistor, a 0.2 F capacitor and a 1 H inductor. The question wants the voltage v_o across the capacitor. An AC run works at one frequency, so the answer takes one run per source, with the other source switched off: a voltage source at zero is a short, and a current source at zero is an open. We call the top of the voltage source **a** and the top of the capacitor **b**, with the bottom rail as ground, so v_o is the voltage at node **b**. The first run keeps the voltage source alone, at 5 rad/s. Phasors are measured against a cosine, and 75 sin 5t is 75 cos(5t − 90°), so its value is the phasor `(75∠-90°)`. The current source gets the value 0:

Circuit Description

```
e,a,0,(75∠-90°)
r8,a,b,8
c,b,0,0.2
l,b,0,1
j,0,b,0
```

Set **Analysis** to *AC — alternating current*. Put **5** in the ω **— angular frequency** box. Set **Rounding** in **Settings** to *approx to n digits* with **n** = 4.

Symbulator returns `v_b` = **-11.44 - 1.787j** V (**11.58∠-171.1°**, the book's V_1).

The second run keeps the 6 cos 10t A source alone, at 10 rad/s, its value the plain amplitude 6, and the voltage source gets the value 0:

Circuit Description

```
e,a,0,0
r8,a,b,8
c,b,0,0.2
l,b,0,1
j,0,b,6
```

Set **Analysis** to *AC — alternating current*. Put **10** in the **ω — angular frequency** box. Set **Rounding** in **Settings** to *approx to n digits* with **n** = 4.

Symbulator returns `v_b` = **0.2069 - 3.144j** V (**3.151∠-86.24°**, the book's V_2).

The two phasors are the terms of v_o at their own frequencies. Written back in time and added, $v_o = 11.58\cos(5t - 171.1°) + 3.151\cos(10t - 86.24°)$ V. The book prints $v_o = 11.577\sin(5t - 81.12°) + 3.154\cos(10t - 86.24°)$ V. The small differences may be due to rounding.

AS7's Example 10.9

Find the Thévenin equivalent of the circuit in the figure as seen from terminals a-b.

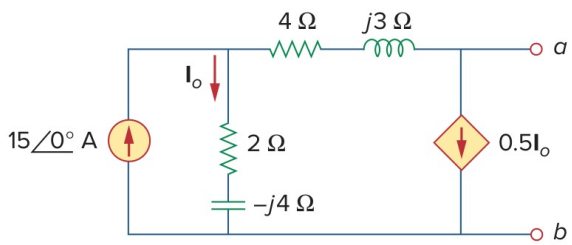

Alexander & Sadiku, 7th edition — the circuit for Example 10.9

SOLUTION

The circuit consists of a 15 A source, a dependent current source and two impedances, and the question wants its Thévenin equivalent at terminals a and b. The dependent source is worth half of I_o, the current down through the 2 Ω and $-j_4$ Ω branch. Nothing else connects between the 2 Ω and the $-j_4$ Ω, so we write them as one impedance, `r1` worth `2-4j`, and I_o is its current `ir1`. Likewise the 4 Ω and j_3 Ω become `r2` worth `4+3j`. We call the top of the 15 A source **1**, keep **a** for the top terminal and take terminal b as ground. The dependent source's arrow points down, so it is `j2,a,0,ir1/2`.

Circuit Description

```
j1,0,1,15
r1,1,0,2-4j
r2,1,a,4+3j
j2,a,0,ir1/2
```

Open **Find equivalent**, choose *Thévenin / Norton*, and give the two terminals **a** and **0**. Set

Analysis to *AC — alternating current*. Leave **omega** in the ω **— angular frequency** box, since nothing here depends on the frequency. Set **Rounding** in **Settings** to *approx to n digits* with **n** = 4.

Symbulator returns `vth` = **-55j** V (**55.00∠-90.00°**) and `zeq` = **4 - 0.6667j** Ω (**4.055∠-9.462°**, the book's Z_{Th}).

AS7's Practice Problem 10.9

Determine the Thévenin equivalent of the circuit in the figure as seen from the terminals a-b.

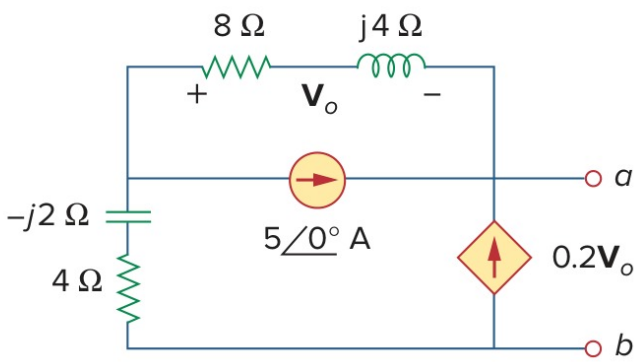

Alexander & Sadiku, 7th edition — the circuit for Practice Problem 10.9

SOLUTION

The circuit consists of a 5 A source, a dependent current source worth 0.2 times V_x and two impedances, and the question wants its Thévenin equivalent at terminals a and b. V_x is marked across the 8 Ω and j_4 Ω in series, which nothing else joins, so we write that pair as one impedance, `r2` worth `8+4j`, and V_x is its voltage drop `vr2`. The $-j_2$ Ω and 4 Ω on the left become `r1` worth `4-2j`. We call their top **1**, keep **a** for the top terminal and take terminal b as ground. The 5 A source's arrow points from **1** to **a**, and the dependent source's up from ground to **a**, so it is `j2,0,a,vr2/5`.

Circuit Description

```
r1,1,0,4-2j
r2,1,a,8+4j
j1,1,a,5
j2,0,a,vr2/5
```

Open **Find equivalent**, choose *Thévenin / Norton*, and give the two terminals **a** and **0**. Set **Analysis** to *AC — alternating current*. Leave **omega** in the ω **— angular frequency** box, since nothing here depends on the frequency. Set **Rounding** in **Settings** to *approx to n digits* with **n** = 4.

Symbulator returns `vth` = **2.162 + 7.027j** V (**7.352∠72.90°**) and `zeq` = **4.432 - 0.5946j** Ω (**4.472∠-7.640°**, the book's Z_{Th}).

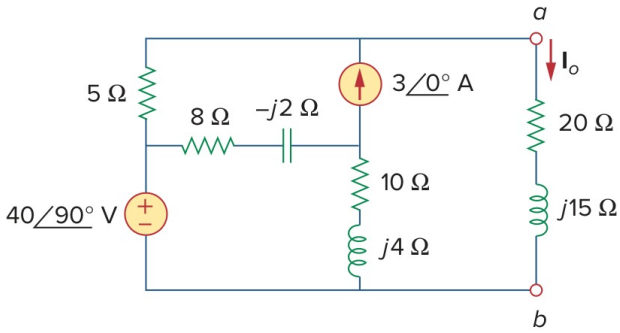

Alexander & Sadiku, 7th edition — the circuit for Example 10.10

AS7's Example 10.10

Obtain current I_o in the figure.

SOLUTION

The circuit consists of a voltage source, a current source and four branches of impedances, and the question wants the current I_o down through the right-hand branch. The top wire of the figure runs from the 5 Ω resistor to terminal a, so it is one node, which we call **a**, with terminal b and the bottom rail as ground. We call the node between the 5 Ω and the source **l** and the centre of the figure **m**. Impedances in series with nothing between them we write as one: `r8` worth `8-2j`, `r10` worth `10+4j`, and `ro` worth `20+15j` for the branch that carries I_o. The source is the phasor `(40∠90°)`. The 3 A source's arrow points up, from **m** to **a**.

Circuit Description

```
r5,a,l,5
e,l,0,(40∠90°)
r8,l,m,8-2j
j,m,a,3
r10,m,0,10+4j
ro,a,0,20+15j
```

Set **Analysis** to *AC — alternating current*. Leave **omega** in the **ω — angular frequency** box, since nothing here depends on the frequency. Set **Rounding** in **Settings** to *approx to n digits* with **n** = 4.

Symbulator returns `i_ro` = **1.147 + 0.9118j** A (**1.465∠38.48°**, the book's I_o).

AS7's Example 10.11

Determine $v_o(t)$ for the op amp circuit in the figure if v_s = 3 cos 1000t V.

SOLUTION

The circuit consists of an op amp fed through a network of three resistors and two capacitors, and the question wants the output for a 3 V cosine at 1000 rad/s. The capacitors are given as capacitances, so we write them as they are and put 1000 in the **ω — angular frequency** box. The source is a cosine of amplitude 3 with no phase, so its value is `3`. An ideal op amp is the element `o`, with its non-inverting input first, here on ground. We

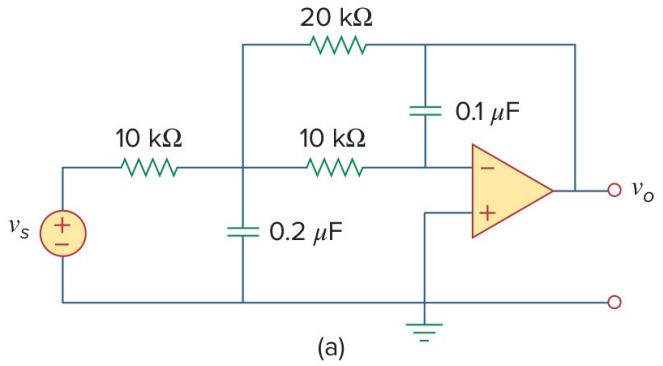

Alexander & Sadiku, 7th edition — the circuit for Example 10.11

call the source's top **s**, the junction of the three resistors **1**, the inverting input **n** and the output **out**, and name the resistors and capacitors after their places: `r1` and `r2` in the input path, `rf` in feedback, `c1` to ground and `c2` from **n** to the output.

Circuit Description

```
e,s,0,3
r1,s,1,10'k
c1,1,0,0.2'u
r2,1,n,10'k
rf,1,out,20'k
c2,n,out,0.1'u
o,0,n,out
```

Set **Analysis** to *AC — alternating current*. Put **1000** in the ω **— angular frequency** box. Set **Rounding** in **Settings** to *approx to n digits* with **n** = 4.

Symbulator returns `v_out` = **0.5294 + 0.8824j** V (**1.029∠59.04°**, the book's V_o).

As a function of time that is $v_o(t)$ = 1.029 cos(1000t + 59.04°) V.

AS7's Practice Problem 10.13

Obtain v_o and i_o in the circuit of the figure.

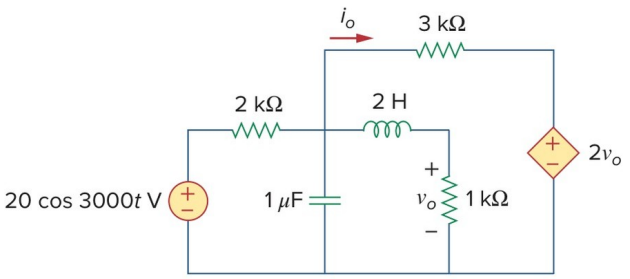

Alexander & Sadiku, 7th edition — the circuit for Practice Problem 10.13

SOLUTION

The circuit consists of a 20 V cosine source at 3000 rad/s, a dependent voltage source worth twice v_o, a capacitor, an inductor and three resistors. The question wants v_o, the voltage across the 1 kΩ resistor, and i_o, the current through the 3 kΩ. We call the source's

top **s**, the node where the 2 kΩ, the capacitor, the inductor and the 3 kΩ meet **1**, the top of the 1 kΩ **2** and the top of the dependent source **d**. We name the resistors after their values, so v_o is the drop across `r1k` and the dependent source's value is `2*vr1k`. The inductor and the capacitor are given in henries and farads, so we put 3000 in the **ω — angular frequency** box. i_o flows from node 1 toward the dependent source, which is how `r3k,1,d` counts it.

Circuit Description

```
e,s,0,20
r2k,s,1,2'k
c,1,0,1'u
l,1,2,2
r1k,2,0,1'k
r3k,1,d,3'k
e2,d,0,2*vr1k
```

Set **Analysis** to *AC — alternating current*. Put **3000** in the **ω — angular frequency** box. Tick **Use SI prefixes in answers** in **Settings**. Set **Rounding** in **Settings** to *approx to n digits* with **n** = 4.

Symbulator returns `v_2` = **-484.6 - 230.3j** mV (**536.5∠-154.6°**, the book's V_o) and `i_r3k` = **622.2 - 892.4j** μA (**1088∠-55.12°**, the book's I_o).

As functions of time those are $v_o = 536.5\cos(3000t - 154.6°)$ mV and $i_o = 1.088\cos(3000t - 55.12°)$ mA. The book's answer comes from a PSpice run and prints the first amplitude as 536.4 mV. The circuit gives 536.55 mV, which is 536.5 at four digits.

AS7's Example 11.4

Determine the average power generated by each source and the average power absorbed by each passive element in the circuit of the figure.

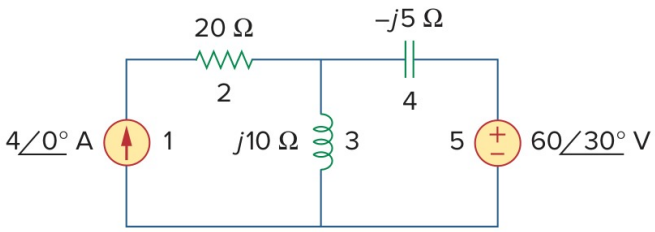

Alexander & Sadiku, 7th edition — the circuit for Example 11.4

SOLUTION

The circuit consists of a current source and a voltage source feeding a resistor, an inductor and a capacitor, and the question wants the average power each source generates and each passive element absorbs. Every card of an AC run carries its element's average power, so one run answers the whole question. We call the top of the current source **1**, the top of the inductor **m** and the top of the voltage source **r**. The impedances are given in ohms, so we write each as a resistor with its value: `r20`, `rl` worth `10j` and `rc` worth `-5j`. The voltage source is the phasor `(60∠30°)`. The question gives peak values, so **RMS** stays off.

```
Circuit Description
j,0,1,4
r20,1,m,20
rl,m,0,10j
rc,m,r,-5j
e,r,0,(60∠30°)
```

Set **Analysis** to *AC — alternating current*. Leave **omega** in the ω **— angular frequency** box, since nothing here depends on the frequency. Set **Rounding** in **Settings** to *approx to n digits* with **n** = 4.

On a passive element the card reads the average power *consumed*, the answer `p`. On a source it reads the power *delivered*, which is the negative of its `p`.

Symbulator returns `-p_j` = **367.8** W, `-p_e` = **-207.8** W, `p_r20` = **160** W (the book's P_2), `p_rl` = **0** W (the book's P_3) and `p_rc` = **0** W (the book's P_4).

The voltage source's delivered power is negative: it absorbs 207.8 W, which the current source supplies along with the resistor's 160 W.

AS7's Example 11.14

In the circuit of the figure, $Z_1 = 60\angle{-30°}\ \Omega$ and $Z_2 = 40\angle 45°\ \Omega$. Calculate the total: (a) apparent power, (b) real power, (c) reactive power, and (d) pf, supplied by the source and seen by the source.

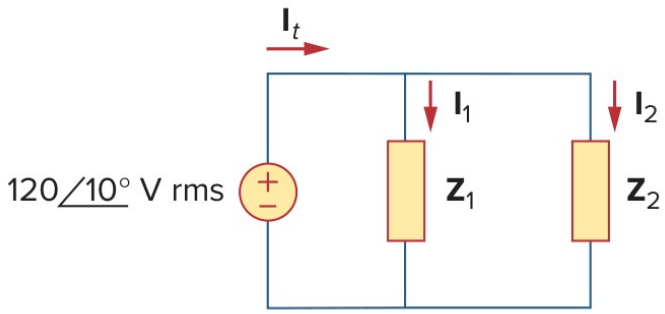

Alexander & Sadiku, 7th edition — the circuit for Example 11.14

SOLUTION

The circuit is a source feeding two impedances in parallel, each given as a magnitude and an angle, and the question wants the source's apparent, real and reactive power and its power factor. We write the two impedances as they are given, as phasors in ohms, `(60∠-30°)` and `(40∠45°)`. A resistor with a complex value is an impedance, so we name them `r1` and `r2` after the book's Z_1 and Z_2. The source is an rms value, so we tick **RMS**, and every power the run reports is then in terms of rms values, as the book's are.

```
Circuit Description
e,1,0,(120∠10°)
r1,1,0,(60∠-30°)
r2,1,0,(40∠45°)
```

Set **Analysis** to *AC — alternating current*. Leave **omega** in the ω **— angular frequency** box,

since nothing here depends on the frequency. Tick **RMS phasors** in **Settings**, since the book's source is given in rms. Set **Rounding** in **Settings** to *approx to n digits* with **n** = 4.

(b) and **(c)** are read off the source's card, which reports the real and the reactive power it delivers.

Symbulator returns `-p_e` = **462.4** W and `-q_e` = **134.6** var.

(a) The apparent power is the magnitude of the complex power the source delivers. We type it into **Evaluate**:

```
Evaluate
abs(s_e)
```

It gives **481.6** VA (the book's $|S|$).

(d) The power factor is on the same card, in its *power factor (delivered)* row, which reads **0.9602 lagging**.

AS7's Practice Problem 13.2

Determine the phasor currents I_1 and I_2 in the circuit of the figure.

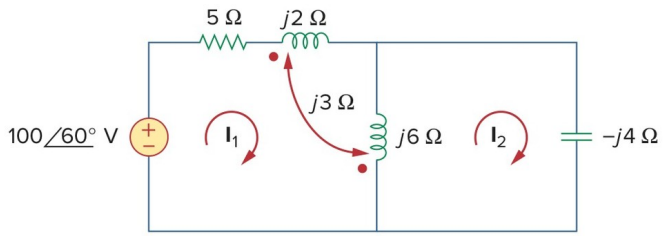

Alexander & Sadiku, 7th edition — the circuit for Practice Problem 13.2

SOLUTION

The circuit consists of a source, a resistor, two coupled coils and a capacitor in two meshes, and the question wants the two mesh currents. Each mesh current is the current of an element that only its own mesh contains: I_1 flows through the 5 Ω resistor and I_2 down through the capacitor. The coils are given as reactances in ohms, so we write each as a resistor with an imaginary value, `rl2` worth `2j` and `rl6` worth `6j`, and the coupling between them as the `m` line, which names the two and their mutual reactance, `3j`. The `m` line reads each coil's first node as its dotted end. The j_2 Ω coil's dot is on the side of the 5 Ω, node **2**, and the j_6 Ω coil's dot is at the bottom, so we write them `rl2,2,3,2j` and `rl6,0,3,6j`. We call the node between the 5 Ω and the coil **2** and the top of the capacitor **3**, with the bottom rail as ground, and name the capacitor `rc`.

```
Circuit Description
e,1,0,(100∠60°)
r5,1,2,5
rl2,2,3,2j
m,rl2,rl6,3j
rl6,0,3,6j
rc,3,0,-4j
```

Set **Analysis** to *AC — alternating current*. Leave **omega** in the ω **— angular frequency** box, since nothing here depends on the frequency. Set **Rounding** in **Settings** to *approx to n digits* with **n** = 4.

Symbulator returns `i_r5` = **1.072 + 17.86j** A (**17.89∠86.57°**, the book's I_1) and `i_rc` = **1.608 + 26.78j** A (**26.83∠86.57°**, the book's I_2).

AS7's Practice Problem 13.13

Find i_o in the circuit of the figure.

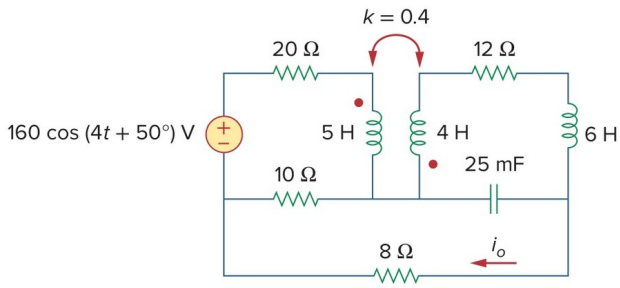

Alexander & Sadiku, 7th edition — the circuit for Practice Problem 13.13

SOLUTION

The circuit consists of a 160 V cosine source at 4 rad/s, two coils coupled with a coefficient of 0.4, a third coil, a capacitor and four resistors. The question wants the current i_o through the 8 Ω resistor. The coils and the capacitor are given in henries and farads, so we write them as they are and put 4 in the ω **— angular frequency** box. The source's value is the phasor `(160∠50°)`. The coupling the figure gives as k, and the `m` line takes it as it is, `m,l1,l2,k=0.4`, naming the two coils. The `m` line reads each coil's first node as its dotted end. The 5 H coil's dot is at its top and the 4 H coil's at its bottom, so we write them `l1,a,m,5` and `l2,m,b,4`. The source's bottom and the left end of the 10 Ω are the bottom wire, which we take as ground. We call the top of the 5 H **a**, the middle wire the two coils and the capacitor share **m**, the top of the 4 H **b**, the top of the 6 H **c** and the right-hand node **r**. i_o flows leftward through the 8 Ω, from **r** to ground, which is how `r8,r,0` counts it.

Circuit Description

```
e,1,0,(160∠50°)
r20,1,a,20
l1,a,m,5
l2,m,b,4
m,l1,l2,k=0.4
r12,b,c,12
l3,c,r,6
c,m,r,25'm
r10,0,m,10
r8,r,0,8
```

Set **Analysis** to *AC — alternating current*. Put **4** in the ω **— angular frequency** box. Set **Rounding** in **Settings** to *approx to n digits* with **n** = 4.

Symbulator returns `i_r8` = **0.7367 + 1.871j** A (**2.011∠68.51°**, the book's I_o).

As a function of time that is $i_o = 2.012\cos(4t + 68.52°)$ A.

AS7's Example 13.14

Find V_1 and V_2 in the ideal transformer circuit of the figure.

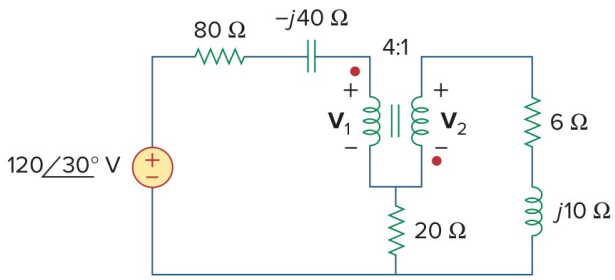

Alexander & Sadiku, 7th edition — the circuit for Example 13.14

SOLUTION

The circuit consists of a source feeding an ideal 4:1 transformer through an impedance, with a 20 Ω resistor below the two windings and a load on the secondary. The question wants the voltage across each winding. The two windings' lower ends meet at the top of the 20 Ω, so they share a node, which we call **x**. An ideal transformer is the element `t`, and when its windings share a node we write each winding as a bracketed pair of terminals, top node then bottom: `[p,x]` for the primary and `[q,x]` for the secondary, followed by the turns. The primary's dot is at its top and the secondary's at its bottom, and that polarity is a minus sign on one of the turn counts, so the ratio is `[-4,1]`. We call the source's top **1**, the primary's top **p** and the secondary's top **q**. The 80 Ω and $-j_{40}$ Ω are in series with nothing between them, so we write them as one impedance, `r1` worth `80-40j`, and likewise the 6 Ω and j_{10} Ω as `r3`.

Circuit Description

```
e,1,0,(120∠30°)
r1,1,p,80-40j
t,[p,x],[q,x],[-4,1]
r2,x,0,20
r3,q,0,6+10j
```

Set **Analysis** to *AC — alternating current*. Leave **omega** in the **ω — angular frequency** box, since nothing here depends on the frequency. Set **Rounding** in **Settings** to *approx to n digits* with **n** = 4.

V_1 is the voltage across the primary, from **p** to **x**. We type it into **Evaluate**:

Evaluate

```
v_p-v_x
```

It gives **71.96 + 55.85j** V (**91.09∠37.81°**, the book's V_1).

And V_2, across the secondary from **q** to **x**:

```
Evaluate
v_q-v_x
```

It gives **-17.99 - 13.96j** V (**22.77∠-142.2°**, the book's V_2).

AS7's Example 14.10

(a) Determine what type of filter is shown in the figure. (b) Calculate the corner or cutoff frequency. Take R = 2 kΩ, L = 2 H, and C = 2 μF.

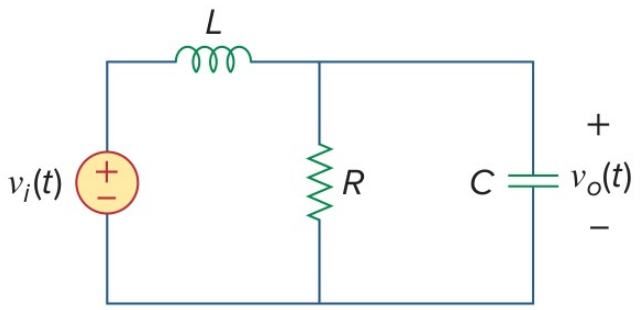

Alexander & Sadiku, 7th edition — the circuit for Example 14.10

SOLUTION

The circuit consists of an inductor in series with a resistor and a capacitor in parallel, the output taken across the pair. The question wants the kind of filter it is and its corner frequency. Both are properties of its gain as a function of frequency, so we leave the input as the symbol `vi` and the frequency as the symbol `omega`, and every answer comes back as a formula in both. The inductor and the capacitor are given in henries and farads, so we write them as they are. We name the resistor `rr`, call the input node **1** and the output **2**.

```
Circuit Description
e,1,0,vi
l,1,2,2
rr,2,0,2'k
c,2,0,2'u
```

Set **Analysis** to *AC — alternating current*. Leave **omega** in the **ω — angular frequency** box, since nothing here depends on the frequency. Set **Rounding** in **Settings** to *approx to n digits* with **n** = 4.

(a) A filter's type is set by how its gain behaves at the two ends of the frequency range. The gain is the output over the input, and we type it into **Evaluate** with the frequency at zero in its **Conditions** box:

```
Evaluate
v_2/vi
```

Conditions

```
omega = 0
```

It gives **1** (the book's $H(0)$).

At the other end we ask for its limit as the frequency grows without bound:

Evaluate

```
limit(v_2/vi, omega, oo)
```

It gives **0** (the book's $H(\infty)$).

The gain passes low frequencies and stops high ones, so this is a low-pass filter.

(b) Its corner frequency is where the magnitude of the gain has fallen to $1/\sqrt{2}$ of its value at zero. In the **Solve** card that is one equation, with the frequency as the unknown:

Equation(s) to solve in terms of the results

```
abs(v_2/vi)=1/sqrt(2)
```

Unknown(s) to solve for

```
omega
```

Tick **real solutions only** and press **Solve equations**.

The card returns 2 solutions, `omega` = **-742.3** and `omega` = **742.3**.

AS7's Practice Problem 14.10

For the circuit in the figure, (a) obtain the transfer function $V_o(\omega)/V_i(\omega)$. (b) Identify the type of filter the circuit represents and (c) determine the corner frequency. Take R_1 = 100 Ω = R_2, L = 2 mH.

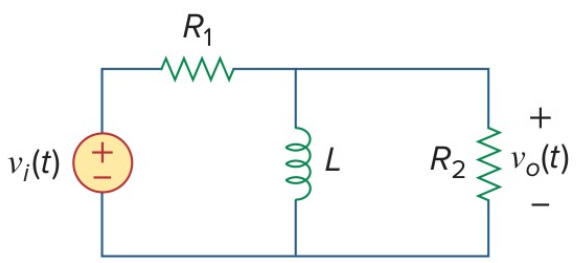

Alexander & Sadiku, 7th edition — the circuit for Practice Problem 14.10

SOLUTION

The circuit consists of a resistor in series with an inductor and a second resistor in parallel, the output taken across the pair. The question wants the transfer function, the kind of filter and its corner frequency. We leave the input as the symbol `vi` and the frequency as the symbol `omega`, so every answer comes back as a formula in both, and we write the inductor as it is given, `2'm`. We call the input node **1** and the output **o**, and name the

resistors after the book's R_1 and R_2. The transfer function is the output voltage divided by `vi`, which we read in the **Evaluate** card.

Circuit Description

```
e,1,0,vi
r1,1,o,100
l,o,0,2'm
r2,o,0,100
```

Set **Analysis** to *AC — alternating current*. Leave **omega** in the **ω — angular frequency** box, since nothing here depends on the frequency. Set **Rounding** in **Settings** to *approx to n digits* with **n** = 4.

transfer function

$$H(\omega) = \frac{v_o}{v_i} = \frac{0.5\omega}{\omega - 2.5 \cdot 10^4 \mathrm{j}}$$

(a) is the transfer function above.

(b) A filter's type is set by how its gain behaves at the two ends of the frequency range. We type the gain into **Evaluate** with the frequency at zero in its **Conditions** box:

Evaluate

```
v_o/vi
```

Conditions

```
omega = 0
```

It gives **0** (the book's $H(0)$).

At the other end we ask for its limit as the frequency grows without bound:

Evaluate

```
limit(v_o/vi, omega, oo)
```

It gives **0.5** (the book's $H(\infty)$).

The gain stops low frequencies and passes high ones, so this is a high-pass filter.

(c) Its corner frequency is where the magnitude of the gain has fallen to $1/\sqrt{2}$ of its high-frequency value, 1/2. In the **Solve** card that is one equation, with the frequency as the unknown:

Equation(s) to solve in terms of the results

```
abs(v_o/vi)=1/(2*sqrt(2))
```

Unknown(s) to solve for

```
omega
```

Tick **real solutions only** and press **Solve equations**.

The card returns 2 solutions, `omega` = **-25000** and `omega` = **25000**.

The positive root is the corner frequency, 25 krad/s.

The s domain — FD

Six problems are in the s domain. FD returns every answer as a function of s, initial conditions included, so a transfer function is nothing more than an answer with the source left as a symbol. A question about time is worked the way the book works it: the circuit is solved in the s domain and the answer inverted afterwards, which is what `s2t` does in the **Evaluate** card. The initial- and final-value theorems are two limits typed into the same card, and poles and zeros are one entry in the **Mini-Tools** card.

AS7's Example 14.2

For the circuit in the figure, calculate (a) the gain $I_o(\omega)/I_i(\omega)$ and (b) its poles and zeros.

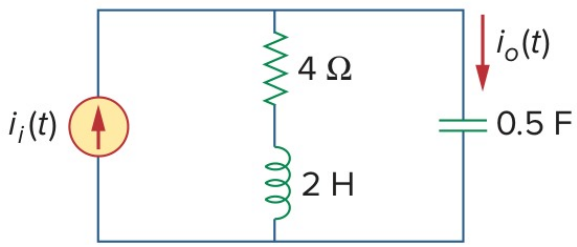

Alexander & Sadiku, 7th edition — the circuit for Example 14.2

SOLUTION

The circuit consists of a current source feeding two branches in parallel, a 4 Ω resistor in series with a 2 H inductor, and a 0.5 F capacitor. The question wants the ratio of the capacitor's current to the source's, and its poles and zeros. Poles and zeros belong to a function of s, so we set the analysis to FD, which writes the inductor as $2s$ and the capacitor as $1/0.5s$. We leave the source as the symbol `ii`, so that every answer comes back as a multiple of it, and write the capacitance as the fraction `1/2`, which keeps the answers exact. We call the top node **1** and the node between the resistor and the inductor **a**. I_o flows down through the capacitor, which is how `c,1,0` counts it, and the gain is its current divided by `ii`, which we will read in the **Evaluate** card.

Circuit Description

```
j,0,1,ii
r4,1,a,4
l,a,0,2
c,1,0,1/2
```

Set **Analysis** to *FD — complex frequency domain*.

current gain

$$H(s) = \frac{i_c}{i_i} = \frac{s\,(s+2)}{s^2+2s+1}$$

(a) is the current gain above.

(b) The poles are the values of s that make the gain's denominator zero, and the zeros the values that make its numerator zero. The **Mini-Tools** card finds both at once: we choose *pz — poles and zeros* in its **Tool** menu and give it the gain.

```
Value
ic/ii
```

Press **Run**.

The card returns the poles **-1 ×2**, and the zeros **-2** and **0**.

The mark ×2 says the pole is a double one. So the gain has zeros at $s = 0$ and $s = -2$ and a double pole at $s = -1$. The book writes the gain in ω, and $s = j\omega$ turns one form into the other.

AS7's Example 16.4

Consider the circuit in the figure. Find the value of the voltage across the capacitor assuming that the value of $v_s(t) = 10u(t)$ V and assume that at $t = 0$, −1 A flows through the inductor and +5 V is across the capacitor.

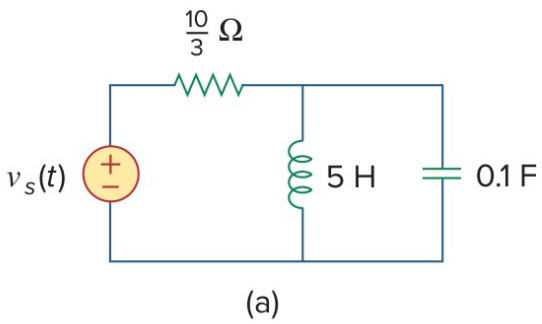

Alexander & Sadiku, 7th edition — the circuit for Example 16.4

SOLUTION

The circuit consists of a step source feeding a resistor, and an inductor and a capacitor in parallel, each holding an initial condition. The question wants the capacitor's voltage, and the book's chapter works it by the Laplace method, so we set the analysis to FD. The source is given as a function of time, $10u(t)$ V, so we type it as given inside curly brackets, `{10u(t)}`, and FD converts it to the s domain. We put the initial conditions in the fifth fields: −1 A on the inductor, counted downward from node 2 as `1,2,0` counts it, and 5 V on the capacitor. We write the resistance and the capacitance as the fractions the book gives, `10/3` and `1/10`. The capacitor's voltage is the voltage at node 2.

```
Circuit Description
e,1,0,{10u(t)}
r,1,2,10/3
l,2,0,5,-1
c,2,0,1/10,5
```

Set **Analysis** to *FD — complex frequency domain*.

voltage at node 2

$$v_2 = \frac{5\,(s+8)}{s^2+3s+2}\ \mathrm{V}$$

`v_2` is the book's $V_1(s)$.

The question asks for the voltage as a function of time. `s2t` turns a function of s back into a function of t, so we give it the answer just read.

Evaluate

```
s2t(v_2)
```

It gives:

the voltage at node 2, back in the time domain

$$v_1(t) = 5\left(7e^{t} - 6\right)e^{-2t}\ \mathrm{V}$$

AS7's Example 16.6

Assume that there is no initial energy stored in the circuit of the figure at t = 0 and that i_s = $10u(t)$ A. (a) Find $V_o(s)$. (b) Apply the initial- and final-value theorems to find $v_o(0^+)$ and $v_o(\infty)$. (c) Determine $v_o(t)$.

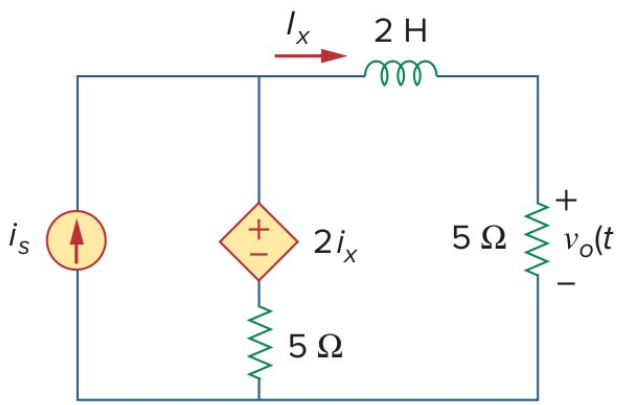

Alexander & Sadiku, 7th edition — the circuit for Example 16.6

SOLUTION

The circuit consists of a step current source, a 2 H inductor, a dependent voltage source worth twice the inductor's current, and two 5 Ω resistors. The question wants the output voltage as a function of s, its initial and final values, and the voltage as a function of time. We set the analysis to FD. The source is given as a function of time, $10u(t)$ A, so we type it as given inside curly brackets, `j,0,a,{10u(t)}`, and FD converts it to the s domain. We call the top left node **a**, the right end of the inductor **b** and the node between the dependent source and its 5 Ω **m**. I_x flows through the inductor from **a** to **b**, so it is `il` and the dependent source is `e,a,m,2*il`. We name the 5 Ω under the dependent source `r5a` and the output resistor `r5b`. V_o is the voltage at node **b**.

Circuit Description

```
j,0,a,{10u(t)}
l,a,b,2
e,a,m,2*il
r5a,m,0,5
r5b,b,0,5
```

Set **Analysis** to *FD — complex frequency domain*. Set **Rounding** in **Settings** to *approx to n digits* with **n** = 4.

voltage at node b

$$v_b = \frac{125.0}{s\,(s+4.0)}\ \mathrm{V}$$

(a) is `v_b` (the book's $V_o(s)$).

(b) The initial-value theorem says $v_o(0^+)$ is the limit of $sV_o(s)$ as s grows without bound. We type that limit into **Evaluate**:

Evaluate

```
limit(s*v_b, s, oo)
```

It gives **0** V (the book's $v_o(0^+)$).

The final-value theorem says $v_o(\infty)$ is the same product's limit as s goes to zero:

Evaluate

```
limit(s*v_b, s, 0)
```

It gives **31.25** V (the book's $v_o(\infty)$).

(c) `s2t` turns $V_o(s)$ back into a function of time:

Evaluate

```
s2t(v_b)
```

It gives:

the voltage at node b, back in the time domain

$$v_o(t) = 31.25 - 31.25e^{-4t}\ \mathrm{V}$$

AS7's Practice Problem 16.6

The initial energy in the circuit of the figure is zero at t = 0. Assume that v_s = $30u(t)$ V. (a) Find $V_o(s)$. (b) Apply the initial- and final-value theorems to find $v_o(0)$ and $v_o(\infty)$. (c) Obtain $v_o(t)$.

SOLUTION

The circuit consists of a step source, a 1 Ω resistor, a 2 Ω resistor, a 1 F capacitor and a dependent voltage source worth four times i_x, the current through the 1 Ω. The question

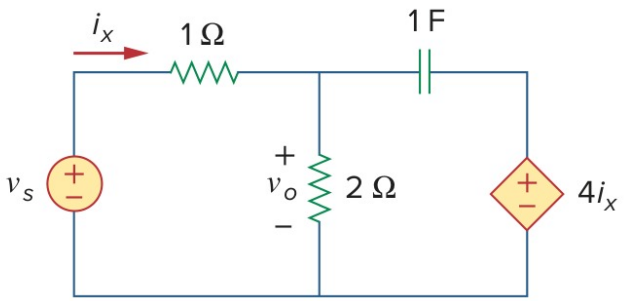

Alexander & Sadiku, 7th edition — the circuit for Practice Problem 16.6

wants the output as a function of s, its initial and final values, and the output as a function of time. We set the analysis to FD. The source is given as a function of time, $30u(t)$ V, so we type it as given inside curly brackets, `e1,1,0,{30u(t)}`, and FD converts it to the s domain. We call the source's top **1**, the top of the 2 Ω **m** and the top of the dependent source **r**, and name the resistors `r1` and `r2`. i_x flows from node 1 to **m** through `r1`, so the dependent source is `e2,r,0,4*ir1`. V_o is the voltage at node **m**.

Circuit Description

```
e1,1,0,{30u(t)}
r1,1,m,1
r2,m,0,2
c,m,r,1
e2,r,0,4*ir1
```

Set **Analysis** to *FD — complex frequency domain*.

voltage at node m

$$v_m = \frac{60\,(4s+1)}{s\,(10s+3)}\ \mathrm{V}$$

(a) is `v_m` (the book's $V_o(s)$).

(b) The initial-value theorem gives $v_o(0)$ as the limit of $sV_o(s)$ as s grows without bound. We type that limit into **Evaluate**:

Evaluate

```
limit(s*v_m, s, oo)
```

It gives **24** V (the book's $v_o(0)$).

The final-value theorem gives $v_o(\infty)$ as the same product's limit as s goes to zero:

Evaluate

```
limit(s*v_m, s, 0)
```

It gives **20** V (the book's $v_o(\infty)$).

(c) `s2t` turns $V_o(s)$ back into a function of time:

Evaluate

```
s2t(v_m)
```

It gives:

the voltage at node m, back in the time domain

$$v_o(t) = 20 + 4e^{-\frac{3t}{10}}\ \text{V}$$

AS7's Example 16.8

Determine the transfer function $H(s) = V_o(s)/I_o(s)$ of the circuit in the figure. (Practice Problem 16.8 asks the same circuit for $I_1(s)/I_o(s)$.)

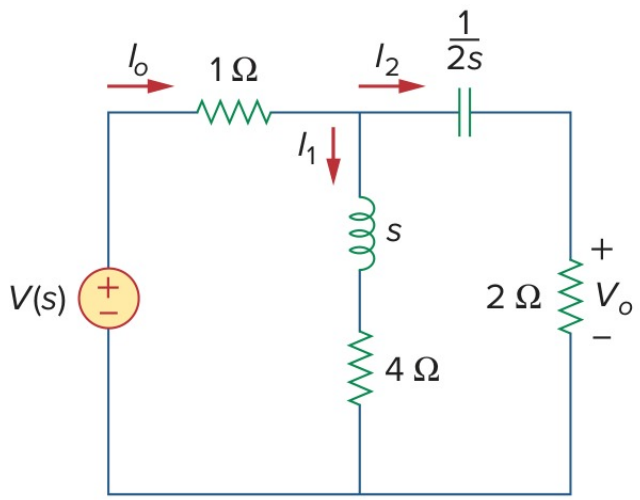

Alexander & Sadiku, 7th edition — the circuit for Example 16.8

SOLUTION

The circuit is given in the s domain: a source feeding a 1 Ω resistor, then two branches, an s Ω inductor in series with a 4 Ω resistor, and a $1/2s$ Ω capacitor in series with a 2 Ω resistor. The question wants the ratio of the output voltage across the 2 Ω to the current into the circuit. We set the analysis to FD and write the elements by their values: an inductor of 1 H, whose impedance is s, and a capacitor of 2 F, whose impedance is $1/2s$. We leave the source as the symbol `vs`. I_o is the current through the 1 Ω, `r1`. We call the top node **t**, the node between the inductor and the 4 Ω **m**, and the top of the 2 Ω **b**, so V_o is the voltage at node **b**.

Circuit Description

```
e,1,0,vs
r1,1,t,1
l,t,m,1
r4,m,0,4
c,t,b,2
r2,b,0,2
```

Set **Analysis** to *FD — complex frequency domain*.

The transfer function is the output voltage over the current into the circuit. We type that ratio into **Evaluate**:

```
Evaluate
v_b/i_r1
```

It gives:

transfer function

$$H(s) = \frac{V_o}{I_o} = \frac{4s\,(s+4)}{2s^2 + 12s + 1}$$

Practice Problem 16.8's ratio is the current down through the inductor branch over the same input current:

```
Evaluate
i_l/i_r1
```

It gives:

transfer function

$$H(s) = \frac{I_1}{I_o} = \frac{4s + 1}{2s^2 + 12s + 1}$$

AS7's Example 16.9

For the s-domain circuit in the figure, find: (a) the transfer function $H(s) = V_o/V_i$, (b) the impulse response, (c) the response when $v_i(t) = u(t)$ V, (d) the response when $v_i(t) = 8$ cos $2t$ V.

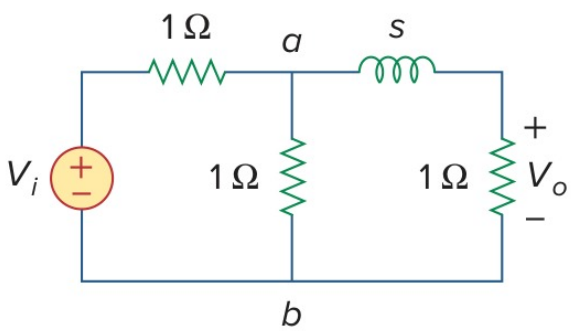

Alexander & Sadiku, 7th edition — the circuit for Example 16.9

SOLUTION

The circuit is given in the s domain: three 1 Ω resistors and an inductor whose impedance is s, that is 1 H. The question wants the transfer function and the circuit's response to three different inputs. One FD run gives the transfer function, and each response is that function times the input's transform, turned back into time. So we leave the input as the symbol `vi` and set the analysis to FD. We call the input node **in**, keep the figure's **a**, and call the output **out**.

Circuit Description

```
e,in,0,vi
r1,in,a,1
r2,a,0,1
l,a,out,1
r3,out,0,1
```

Set **Analysis** to *FD — complex frequency domain*. Set **Rounding** in **Settings** to *approx to n digits* with **n** = 4.

(a) The transfer function is the output over the input. We type that ratio into **Evaluate**:

Evaluate

```
v_out/vi
```

It gives:

transfer function

$$H(s) = \frac{V_o}{V_i} = \frac{1}{2.0s + 3.0}$$

(b) The impulse response is the output when the input's transform is 1, which is $H(s)$ itself back in the time domain. `s2t` does that:

Evaluate

```
s2t(v_out/vi)
```

It gives:

the impulse response

$$h(t) = 0.5e^{-\frac{3t}{2}}$$

(c) A unit step has the transform $1/s$, so the step response is $H(s)/s$ back in the time domain:

Evaluate

```
s2t(v_out/vi/s)
```

It gives:

the step response

$$v_o(t) = 0.3333 - 0.3333e^{-\frac{3t}{2}}\ \mathrm{V}$$

(d) The transform of 8 cos $2t$ is $8s/(s^2 + 4)$, and the response is $H(s)$ times that, back in the time domain:

Evaluate

```
s2t(v_out/vi*8*s/(s^2+4))
```

It gives:

> the response to 8 cos 2t
>
> $$v_o(t) = 1.28\sin(2t) + 0.96\cos(2t) - 0.96e^{-\frac{3t}{2}}\ \mathrm{V}$$